TIMKEN

TIMKEN BALL BEARINGS CATALOG

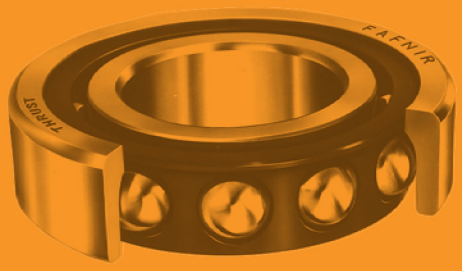

RADIAL AND ANGULAR CONTACT BEARINGS

Overview: Timken is a premier manufacturer of ball bearings. We produce a broad range of precision ball bearings, wide inner ring ball bearings and housed units for standard industrial applications and specialized uses. From standard single-row deep groove radial ball bearings to advanced integral designs, Timken has your solution.

- **Sizes:** 3 mm - 600 mm bore.
- **Markets:** Aircraft, construction, agriculture, machine tool and general industry.
- **Features:** Special coatings for corrosion resistance, special seal designs.
- **Benefits:** Radial: Better life in contaminated environments.

  Angular: Single-row angular contact ball bearing - suited to work in lower operating temperature and high speed with a heavy thrust load. Can be mounted in a duplex arrangement. The refined bore tolerance give a higher life.

  Double-row angular contact ball bearing - excellent axial and radial rigidity in confined space.

Radial and Angular Contact Ball Bearings

Prefixes:

A	stainless steel
F	flanged outer ring
H	snug fit
J	extra loose internal fit
JJ	extra extra loose internal fit
L	internal self-aligning
M	precision ABEC 3
P	loose fit
R	normal fit
S	extra small inch-dimension type
T	tight fit
V	precision ABEC 5
W	wide-type single-row (same width inner and outer)
WIR	single-row, wide inner only

Bore Size: (04 and up: multiply last two numbers by five to get bore in millimeters)

00	10 mm
01	12 mm
02	15 mm
03	17 mm
04	20 mm
05	25 mm
12	60 mm
20	100 mm

Suffixes:

C1, C2, C3, etc. (manufacturing code - Timken® use only)	
FT	full ball complement
K	Conrad, non-filling slot type
W	maximum capacity, filling slot type
WI	angular contact, low-shoulder outer
WO	angular contact, low-shoulder inner
WN	angular contact, low-shoulder, inner and outer

W **3** **05** **K** **LL**

Numbers: Basic Type Series:

S1	**3, 5, 7, etc.,** single-row inch, extra small
30	single-row metric, extra small
100	single-row, extra large
200	single-row, light
300	single-row, medium
5200	double-row, light
5300	double-row, medium
7200	single-row, angular contact, light
7300	single-row, angular contact, medium
7400	single-row, angular contact, heavy
9100	single-row, extra-light
9300	single-row, ultra-light
XLS	inch-dimension, Conrad type

Additional Features:

B	spherical outside diameter
BR	cast bronze retainer
D	one shield
DD	two shields
G	Wireloc (snap ring)
L	one Mechani-Seal
LL	two Mechani-Seals
MBR	machined bronze retainer
P	one seal
PP	two seals
PP2, 3, 4, etc.	Tri-Ply Seals if prefix letter is W (example: W208PPB5)
R	one land-riding rubber seal
RR	two land-riding rubber seals
S	external self-aligning
SMBR	iron silicon bronze retainer
T	one felt seal
TT	two felt seals

Radial and Angular Contact Ball Bearings

RADIAL BALL BEARINGS

Page

Introduction D4
Extra Small 30 Metric Series D6
Extra Small 33 Series and S Inch Series D8
F Flanged Series, Cylindrical and Tapered O.D. D9
ST Flangette Unit D10
RTF-Rubber Tire Flanged Housed Unit D10
Special Bearings D11
Ultra-Light 9300K Series D12
Extra-Light 9100K Series D12
Light 200K Series D14
Light 200W Series D16
Light 200 Series, Extra Width Inner Ring D18
Light 200 Series, Felt Seal Type D20
Light, Wide Type, W200PP, W200KLL Series D21
Medium 300K Series D22
Medium 300W Series D24
Medium, Wide Type, W300PP, W300KLL Series D26
Tri-Ply Seal Series, Non-Relubricatable Type Cylindrical O.D. D27

Page

Tri-Ply Seal Series, Non-Relubricatable Type Spherical O.D. D28
Tri-Ply Seal Series, Relubricatable Type D29
Tri-Ply Seal Series, Disk Harrow Units D30
Hex Bore Bearings D31
Light 200 Series, R-Seal Type D32
Farm Radial Specials D33
XLS Series, Conrad and Maximum Capacity Types D36
Extra Large 100 Series D38

SINGLE-ROW ANGULAR CONTACT BEARINGS

Introduction D39
Light 7200WN Series D40
Medium 7300WN Series D41
Heavy 7400 Series D42

DOUBLE-ROW ANGULAR CONTACT BEARINGS

Light 5200 Series D43
Medium 5300 Series D44
Shield and Snap Ring Combinations, 5200, 5300 Series . . . D45

INTRODUCTION

EXTRA SMALL SERIES

Extra small bearings are available in the 30 Metric Series, the 33 and S Inch Series and the F Flanged Series. These bearings can sustain radial, thrust and combined loads proportionate to the capacities of the small shafts for which they are designed. They are appropriate for use in fractional horsepower motors, precision instruments, domestic appliances, film projectors and similar devices.

The F flanged series has external shoulders with the bearing for mounting in through-bored housings. This series is used where compactness is essential or where it is not feasible to machine housing shoulders.

All series in the extra small family include shielded versions. The 30 Metric Series is also available with felt seals, Mechani-Seals and rubber seals, while the 33 and S Inch Series is available with rubber seals.

Some sizes in the Extra Small Series are manufactured from stainless steel.

Extra Small Series

EXTRA SMALL 33 AND S SERIES BUSINESS MACHINE BEARINGS

Standard and special extra small bearings are available and often used in business machine applications. They include clamp-type collar bearings for slip-fit mounting on shafts, bearings with Wireloc in the outer ring, and rubber cushioned "O" series with special housed units.

EXTRA LIGHT 9300 AND 9100 SERIES

Bearings in the Extra Light 9300 and 9100 Series are ideally suited for applications where housing diameters are restricted and it is desirable to maintain relatively large shaft diameters. Both series are made in the Conrad or non-filling slot construction with the 9300 Series having a somewhat thinner section.

The 9100 Series is generally available with shields, rubber seals and snap ring combinations. The 9300 Series is selectively available with two rubber seals. Machine tools, textile machinery and jet engine gear boxes are some of the end products in which these series have found wide use.

Extra Light 9300 and 9100 Series

LIGHT 200 SERIES

Bearings in the 200 Series have a greater section height than the Extra Light 9300 and 9100 Series bearings and feature a close dimensional balance between bore, outside diameter and width. These characteristics make them well-suited for a broad range of applications involving light to medium loads combined with relatively high speeds.

Their versatility has made them a popular design choice of designers and has resulted in many variations in the series. They are available in either the Conrad or maximum capacity type and with shields, rubber seals, Mechani-Seals, felt seals or a combination of shield and seal. Snap ring combinations are also included.

Wide-type 200 Series rubber seal (W200PP) and Mechani-Seal (W200KLL) bearings are made with standard bores and outside diameters, but in widths equal to the corresponding sizes of double-row bearings. This series offers a larger support area for shaft and housing contact and extra space for lubricant.

Light 200 Series

MEDIUM 300 SERIES

The 300 Series radial ball bearings are similar in construction to the 200 Series, but have considerably heavier cross sections throughout. They provide greater radial and thrust capacity and are able to withstand heavier shock loads.

Because of their rugged construction, these bearings are particularly suited for heavy-duty applications like those found in large electric motors, woodworking machinery and gear boxes. This series includes both Conrad and maximum capacity designs as well as shielded, sealed and snap ring variations.

In the 300 Series wide-type, rubber seal (W300PP) and Mechani-Seal (W300KLL) bearings are made with standard bores and outside diameters, but in width equal to the corresponding sizes of double-row bearings.

Medium 300 Series

XLS AND EXTRA LARGE 100 SERIES

Bearings in the inch-dimension XLS Series and metric-dimension Extra Large 100 Series have extra large diameters and a compact cross section. XLS bearings are made in the Conrad and maximum capacity filling slot designs. The Extra Large 100 Series offers the maximum capacity, filling slot and counterbore types.

XLS and Extra Large 100 Series

TRI-PLY SEAL DISK HARROW BEARINGS

Bearings with Tri-Ply Seals are designed for service involving severe contamination, such as disk harrows, disk tillers and other seed preparation equipment and certain conveyor applications. Tri-Ply sealed units come in two designs – one consisting of three Timken rubber seals separated by steel spacers and retained by steel caps in the outer ring and the other, a highly effective one-piece, molded seal design. Both designs have an exterior shroud cap to protect the seals and reinforce the exceptional sealing action of the complete unit. A patented notched seal groove design, provided on selected sizes, is one of the most positive seal retention methods ever developed.

Tri-Ply Seal Disk Harrow Bearings

HEX BORE BEARINGS

These bearings are designed for either outer or inner ring rotation in low speed, moderately loaded applications such as farm machinery and conveyors. Their chief advantage is ease of mounting. Except for axial positioning by adjacent parts, no collars, setscrews or other external parts are required to lock the inner ring to the hex shaft.

Hex Bore Bearings

R-SEAL DISK HARROW BEARINGS

R-Seal bearings are designed for a wide variety of farm machinery applications where single-lip positive contact seals are required. Each sealing element has a Timken Fafnir rubber seal that effectively seals the bearing with a heavy flare on the cylindrically ground O.D. (inner ring). A steel back-up plate supports the seal rubber and prevents the seal lip from inverting. An outside metal shroud cap gives maximum abrasion protection to the rubber element and completes the assembly that is rolled into the outer ring seal groove for positive retention.

R-Seal radial ball bearings are used in positions in planting, cultivating and harvesting machinery. They are available in various configurations including round bores in metric and inch dimensions and cylindrical and spherical outside diameters.

R-Seal Agricultural Bearings

ANGULAR CONTACT – SINGLE-ROW 7000 PRODUCT FAMILY

Timken offers a 7200WN Light, 7300WN Medium and 7400WN Heavy Series single-row, angular contact bearings, which are designed for combination loading with high-thrust capacity in one direction.

The 7000WN bearings are manufactured with better than ABEC 1 inner ring bore tolerances and ABEC 3 running accuracy. These bearings, when mounted in a duplex arrangement, provide axial and/or radial rigidity in applications where control of shaft displacement is essential.

These bearings are available with various cage designs as defined in the dimension tables. The external dimensions of all 7000WN bearings interchange with corresponding sizes in the 200, 300 and 400 single-row radial series.

Single-Row Angular Contact Bearings 7000 Product Family

ANGULAR CONTACT – DOUBLE-ROW

Double-row Angular Contact Bearings are available in the Light 5200 and Medium 5300 Series. These bearings have the same bores and outside diameters as the corresponding sizes in the 200 and 300 Series, single-row, radial type.

Chief advantages of the double-row type are rigidity, compactness and high capacity. The two rows of balls provide for bearings large radial capacity combined with moderate thrust capacity in either direction.

Double-row bearings are available in both the Conrad (K) construction with uninterrupted race shoulders and the maximum capacity type. The latter has a filling slot in the shoulder of both rings and a maximum ball complement.

Sizes with the W suffix have the filling slot on one side only. In these cases, thrust should be applied on the side opposite the filling slot.

Double-Row Angular Contact

EXTRA SMALL 30 METRIC SERIES

- Designed for small shafts.
- Can sustain radial, thrust and combined load proportionate to capacities of small shafts.
- Suitable for use in fractional horsepower motors, domestic appliances, precision instruments and similar devices.
- Offer various combinations of shields and seals, as listed below.
- Electric motor quality for applications where quietness is required.
- Stainless steel series, denoted by a prefix A before the bearing number. (Example: A38K)

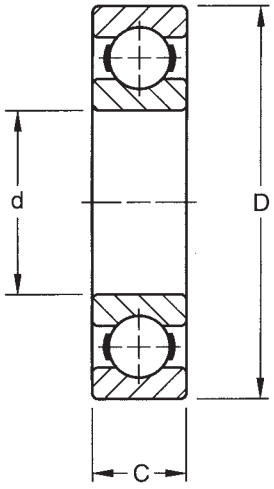

Open

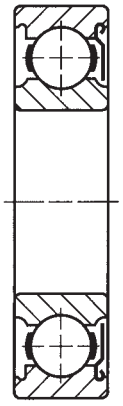
One Shield
D

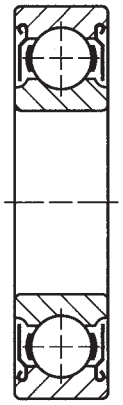
Two Shields
DD

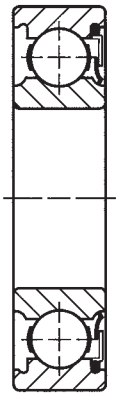
One Rubber Seal
P

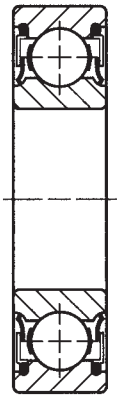
Two Rubber Seals
PP

OPEN AND SHIELDED TYPES DIMENSIONS – TOLERANCES

Bearing Number open	one shield D	two shield DD	Bore d +.000 mm, -0.008 mm +0.0000", -0.0003"		Outside Diameter D tolerance +0.000 mm +0.0000" to minus				Width C +0.00 mm, -.12 mm +0.000", -0.005"		Fillet Radius(1)		Wt.		Static Load Rating C_o		Extended Dynamic Load Rating C_E(2)	
			mm	in.	mm	in.	mm	in.	mm	in.	mm	in.	kg	lbs.	N	lbs.	N	lbs.
34K	34KD	34KDD	4	0.1575	16	0.6299	0.008	0.0003	5	0.197	0.3	0.012	0.005	0.01	560	125	1630	365
35K	35KD	35KDD	5	0.1969	19	0.7480	0.009	0.00035	6	0.236	0.3	0.012	0.009	0.02	865	195	2450	560
36K	36KD	36KDD	6	0.2362	19	0.7480	0.009	0.00035	6	0.236	0.3	0.012	0.009	0.02	865	195	2450	560
37K	37KD	37KDD	7	0.2756	22	0.8661	0.009	0.00035	7	0.276	0.3	0.012	0.009	0.02	1400	312	3650	830
38K	38KD	38KDD	8	0.3150	22	0.8661	0.009	0.00035	7	0.276	0.3	0.012	0.009	0.02	1400	312	3650	830
38KV	—	—	8	0.3150	24	0.9449	0.009	0.00035	7	0.276	0.3	0.012	0.018	0.04	1370	305	3650	830
39K	39KD	39KDD	9	0.3543	26	1.0236	0.009	0.00035	8	0.315	0.3	0.012	0.018	0.04	1960	440	5000	1120

(1) Maximum shaft or housing fillet radius that bearing corners will clear.
(2) Based on 10^6 revolutions of calculated fatigue life.

SEALED TYPES DIMENSIONS – TOLERANCES

Bearing Number one seal P	two seals PP	Bore d +0.000 mm, -.008 mm +0.0000", -.0003"		Outside Diameter D +.000 mm, -.009 mm +0.0000", -.00035"		Width C +0.00 mm, -.12 mm +0.000", -0.005"		Fillet Radius(1)		Wt.		Static Load Rating C_o		Extended Dynamic Load Rating C_E(2)	
		mm	in.	mm	in.	mm	in.	mm	in.	kg	lbs.	N	lbs.	N	lbs.
36P	36PP	6	0.2362	19	0.7480	10	0.394	0.3	0.012	0.014	0.03	865	195	2450	560
36P2	36PP2	6	0.2362	19	0.7480	6	0.236	0.3	0.012	0.014	0.03	865	195	2450	560
37P	37PP	7	0.2756	22	0.8661	10	0.394	0.3	0.012	0.018	0.04	1370	305	3650	830
37P2	37PP2	7	0.2756	22	0.8661	7	0.276	0.3	0.012	0.018	0.04	1400	312	3650	830
38P	38PP	8	0.3150	22	0.8661	10	0.394	0.3	0.012	0.018	0.04	1370	305	3650	830
38P2	38PP2	8	0.3150	22	0.8661	7	0.276	0.3	0.012	0.018	0.04	1400	312	3650	830
39P	39PP	9	0.3543	26	1.0236	8	0.315	0.6	0.024	0.023	0.05	1960	440	5000	1120

(1) Maximum shaft or housing fillet radius that bearing corners will clear.
(2) Based on 10^6 revolutions of calculated fatigue life.

EXTRA SMALL 30 METRIC SERIES

MECHANI-SEALS

- Developed by The Timken® Company.
- Adapted to the 30 metric series for effective grease retention and exclusion of foreign matter.
- Can be operated at speeds comparable to open-type bearings.
- Available with:
  - One Mechani-Seal (suffix L).
  - One Mechani-Seal and one shield (suffix LD).
  - Two Mechani-Seals (suffix LL).

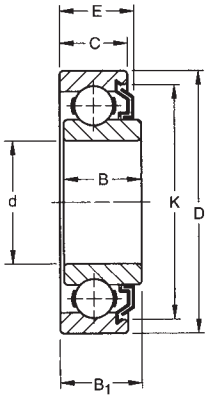

One Seal
L

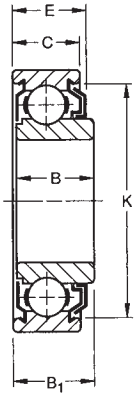

One Seal and Shield
LD

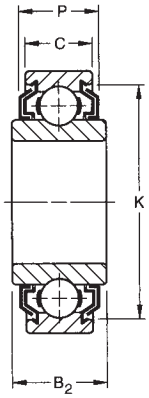

Two Seals
LL

DIMENSIONS – TOLERANCES

Bearing Number one seal L	one seal and shield LD	two seals LL	Bore d +0.000 mm -0.008 mm +0.0000" -0.0003" mm	in.	Outside Diameter D +0.000 mm -0.009 mm +0.0000" -0.00035" mm	in.	Width B_1 mm	in.	Ring Width +0.00 mm, -.12 mm +0.000" -.005": inner B mm	in.	inner B_2[3] mm	in.	outer C mm	in.	Fillet Radius[1] mm	in.	Seal Protection width E mm	in.	width P mm	in.	O.D. K mm	in.	Inner Ring Offset[2] mm	in.	Wt. kg	lbs.	Static Load Rating C_o N	lbs.	Extended Dynamic Load Rating C_E[4] N	lbs.
36KL	36KLD	36KLL	6	0.2362	19	0.7480	10.31	0.406	9.80	0.386	14.27	0.562	8.00	0.315	0.3	0.012	9.60	0.378	10.87	0.428	16.7	21/32	0.50	0.020	0.014	0.03	865	195	2450	560
36KVL	—	—	6	0.2362	24	0.9449	10.31	0.406	9.80	0.386	—	—	8.00	0.315	0.3	0.012	9.60	0.378	—	—	19.0	3/4	0.50	0.020	0.022	0.05	865	195	2450	560
37KL	37KLD	37KLL	7	0.2756	22	0.8661	10.31	0.406	9.80	0.386	14.27	0.562	8.00	0.315	0.3	0.012	9.60	0.378	11.18	0.440	18.7	47/64	0.50	0.020	0.018	0.04	1400	312	3650	830
37KVL	37KVLD	—	7	0.2756	24	0.9449	10.31	0.406	9.80	0.386	—	—	8.00	0.315	0.3	0.012	9.60	0.378	—	—	19.0	3/4	0.50	0.020	0.022	0.05	1400	312	3650	830
38KL	38KLD	38KLL	8	0.3150	22	0.8661	10.31	0.406	9.80	0.386	14.27	0.562	8.00	0.315	0.3	0.012	9.60	0.378	11.18	0.440	18.7	47/64	0.50	0.020	0.018	0.04	1400	312	3650	830
38KVL	38KVLD	38KVLL	8	0.3150	24	0.9449	10.31	0.406	9.80	0.386	14.27	0.562	8.00	0.315	0.3	0.012	9.60	0.378	11.13	0.438	19.0	3/4	0.50	0.020	0.022	0.05	1370	305	3650	830
—	—	38KLL2	8	0.3150	22	0.8661	—	—	—	—	12.62	0.497	8.00	0.315	0.3	0.012	—	—	11.18	0.440	18.7	47/64	—	—	0.022	0.05	1370	305	3650	830
—	—	38KVLL2	8	0.3150	24	0.9449	—	—	—	—	12.62	0.497	8.00	0.315	0.3	0.012	—	—	11.13	0.438	19.0	3/4	—	—	0.022	0.05	1370	305	3650	830
39KL2	39KLD2	—	9	0.3543	26	1.0236	10.31	0.406	9.80	0.386	—	—	8.00	0.315	0.6	0.024	9.60	0.378	—	—	21.4	27/32	0.50	0.020	0.022	0.05	1960	440	5000	1120
—	39KVLD	39KVLL2	9	0.3543	30	1.1811	—	—	—	—	16.41	0.646	9.00	0.354	0.6	0.024	—	—	15.98	0.629	25.4	1	0.50	0.020	0.041	0.09	2650	595	6550	1500

(1) Maximum shaft or housing fillet radius that bearing corners will clear.
(2) Does not apply to bearings with two seals.
Note: Inner ring offset is .51 mm (.020 inches) for the L, LD, and VLD versions.
(3) Two seals (suffix LL) type only.
(4) Based on 10^6 revolutions of calculated fatigue life.

FELT-SEALS

- Provide effective barrier against the entrance of foreign matter and the escape of lubricant.
- Contact seal with the felt riding on the ground surface of inner ring O.D.
- Can be operated at moderate speeds without excessive heating because the felt washer absorbs some lubricant.
- Electric motor quality where quietness is required.
- Available with:
  - One felt seal (suffix T).
  - One felt seal and one shield (suffix TD).
  - Two felt seals (suffix TT).

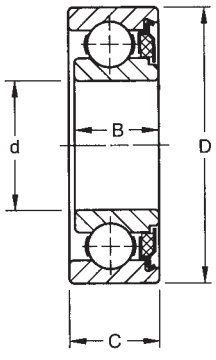

One Felt Seal
T

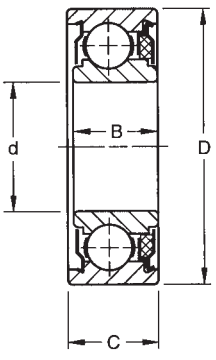

One Felt Seal and Shield
TD

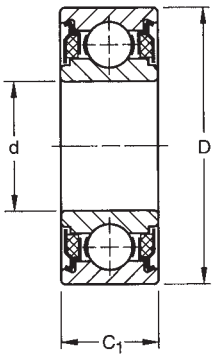

Two Felt Seals
TT

DIMENSIONS – TOLERANCES

Bearing Number one seal T	one seal and shield TD	two seals TT	Bore d +0.000 mm -0.008 mm +0.0000" -0.0003" mm	in.	Outside Diameter D +0.000 mm -0.009 mm +0.0000" -0.00035" mm	in.	Ring Width +0.00 mm, -.12 mm +0.000" -.005": inner B mm	in.	outer C mm	in.	C_1 mm	in.	Inner Ring Offset[2] mm	in.	Fillet Radius[1] mm	in.	Wt. kg	lbs.	Static Load Rating C_o N	lbs.	Extended Dynamic Load Rating C_E[3] N	lbs.
36KT	36KTD	36KTT	6	0.2362	19	0.7480	9.80	0.386	10.31	0.406	14.27	0.562	0.50	0.020	0.3	0.012	0.014	0.03	865	195	2450	560
36KVT	36KVTD	—	6	0.2362	24	0.9449	9.80	0.386	10.31	0.406	—	—	0.50	0.020	0.3	0.012	0.027	0.06	1370	305	3650	830
37KT	37KTD	—	7	0.2756	22	0.8661	9.80	0.386	10.31	0.406	—	—	0.50	0.020	0.3	0.012	0.018	0.04	1370	305	3650	830
37KVT	37KVTD	—	7	0.2756	24	0.9449	9.80	0.386	10.31	0.406	—	—	0.50	0.020	0.3	0.012	0.022	0.05	1370	305	3650	830
38KT	38KTD	38KTT	8	0.3150	22	0.8661	9.80	0.386	10.31	0.406	14.27	0.562	0.50	0.020	0.3	0.012	0.018	0.04	1370	305	3650	830
38KVT	38KVTD	38KVTT	8	0.3150	24	0.9449	9.80	0.386	10.31	0.406	14.27	0.562	0.50	0.020	0.3	0.012	0.022	0.05	1370	305	3650	830
39KT	39KTD	39KTT	9	0.3543	26	1.0236	11.10	0.437	11.51	0.453	14.27	0.562	0.40	0.016	0.6	0.024	0.027	0.06	1960	440	5000	1120
39KVT	39KVTD	—	9	0.3543	30	1.1811	12.19	0.480	12.70	0.500	—	—	0.50	0.020	0.6	0.024	0.041	0.09	2650	595	6550	1500

(1) Maximum shaft or housing fillet radius that bearing corners will clear.
(2) Does not apply to bearings with two seals.
(3) Based on 10^6 revolutions of calculated fatigue life.

EXTRA SMALL 33 AND S INCH SERIES

- Designed for small shafts.
- Can sustain radial, thrust and combined loads, proportionate to capacities of small shafts.
- Suitable for use in fractional horsepower motors, domestic appliances, precision instruments and similar devices.
- Include combinations of shields and seals, as listed below.
- Electric motor quality for applications where quietness is required.
- Several sizes are manufactured both in standard bearing-quality steel and stainless steel, as indicated in the tables.

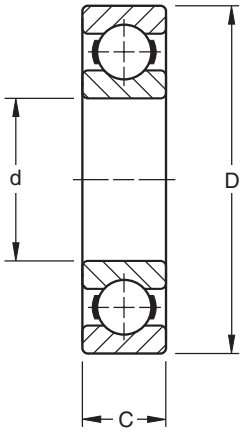

DIMENSIONS – TOLERANCES

Bearing Number		Bore d tolerance +0.000 mm +0.000" to minus				Outside Diameter D tolerance +0.000 mm +0.000" to minus				Width C +0.000 mm, -0.13 mm +0.000, -0.005"		Fillet Radius(1)		Wt.		Static Load Rating C_0		Extended Dynamic Load Rating C_E (2)	
standard	stainless	mm	in.	mm	in.	mm	in.	mm	in.	mm	in.	mm	in.	kg	lbs.	N	lbs.	N	lbs.
33K3	A33K3	3.175	0.1250	0.008	0.0003	9.525	0.3750	0.010	0.0004	3.96	0.156	0.3	0.012	0.005	0.01	212	48	710	160
33K4	A33K4	3.175	0.1250	0.008	0.0003	12.700	0.5000	0.010	0.0004	4.37	0.172	0.3	0.012	0.005	0.01	490	110	1430	325
33K5	A33K5	4.762	0.1875	0.008	0.0003	12.700	0.5000	0.010	0.0004	3.96	0.156	0.3	0.012	0.005	0.01	490	110	1430	325
S1K7	AS1K7	6.350	0.2500	0.008	0.0003	15.875	0.6250	0.010	0.0004	4.98	0.196	0.3	0.012	0.005	0.01	560	125	1630	365
S1K	AS1K	6.350	0.2500	0.008	0.0003	19.050	0.7500	0.010	0.0004	5.56	0.219	0.4	0.016	0.009	0.02	1160	260	3100	695
S3K	AS3K	9.525	0.3750	0.008	0.0003	22.225	0.8750	0.010	0.0004	5.56	0.219	0.4	0.016	0.009	0.02	1400	312	3650	830
S5K	AS5K	12.700	0.5000	0.008	0.0003	28.575	1.1250	0.010	0.0004	6.35	0.250	0.4	0.016	0.018	0.04	2240	500	5600	1270
S7K	AS7K	15.875	0.6250	0.008	0.0003	34.925	1.3750	0.013	0.0005	7.14	0.281	0.8	0.031	0.032	0.07	3050	682	7500	1700
S8K	—	19.050	0.7500	0.010	0.0004	41.275	1.6250	0.013	0.0005	7.92	0.312	0.8	0.031	0.050	0.11	4400	1000	10400	2320
S9K	—	22.225	0.8750	0.010	0.0004	47.625	1.8750	0.013	0.0005	9.52	0.375	0.8	0.031	0.064	0.14	4900	1120	11000	2500
S10K	—	25.400	1.0000	0.010	0.0004	50.800	2.0000	0.013	0.0005	9.52	0.375	0.8	0.031	0.082	0.18	4900	1120	11000	2500
S11K	—	28.575	1.1250	0.010	0.0004	53.975	2.1250	0.013	0.0005	9.52	0.375	0.8	0.031	0.091	0.20	5400	1220	11800	2650
S12K	—	31.750	1.2500	0.013	0.0005	57.150	2.2500	0.013	0.0005	9.52	0.375	0.8	0.031	0.100	0.22	6000	1340	12200	2750

(1) Maximum shaft or housing fillet radius that bearing corners will clear.
(2) Based on 10^6 revolutions of calculated fatigue life.

SHIELD AND SEAL COMBINATIONS

One Shield D

Two Shields DD

One Shield And Seal PD

Two Seals PP

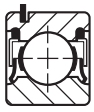
Two Seals Wireloc PPG

Standard One Shield D	Standard Two Shields DD	Stainless One Shield D	Stainless Two Shields DD	Width +0.00 mm, -.12 mm +0.000", -.005"			One Shield And Seal PD	Two Seals PP	Two Seals (Wireloc) PPG	Width +0.00 mm, -.12 mm +0.000", -.005"		
				mm	in.	in.				mm	in.	in.
33KD3	33KDD3	A33KD3	A33KDD3	3.96	0.156	5/32	—	33PP3	—	3.96	0.156	5/32
33KD4	33KDD4	—	—	4.37	0.172	11/64	—	—	—	—	—	—
33KD5	33KDD5	A33KD5	A33KDD5	4.98	0.196	—	—	33PP5	33PPG5	4.98	0.196	—
S1KD7	S1KDD7	AS1KD7	AS1KDD7	4.98	0.196	—	—	S1PP7	S1PPG7	4.98	0.196	—
S1KD	S1KDD	AS1KD	AS1KDD	7.14	0.281	9/32	—	S1PP	S1PPG	7.14	0.281	9/32
S3KD	S3KDD	AS3KD	AS3KDD	7.14	0.281	9/32	—	S3PP	S3PPG	7.14	0.281	9/32
S5KD	S5KDD	AS5KD	AS5KDD	7.92	0.312	5/16	S5PD	S5PP	S5PPG	7.92	0.312	5/16
S7KD	S7KDD	—	—	8.74	0.344	11/32	—	S7PP	—	8.74	0.344	11/32
S8KD	S8KDD	—	AS8KDD	11.13	0.438	7/16	S8PD	S8PP	—	11.13	0.438	7/16
S9KD	S9KDD	—	—	12.70	0.500	1/2	—	—	—	—	—	—
S10KD	S10KDD	—	—	12.70	0.500	1/2	—	S10PP2	—	12.70	0.500	1/2
—	—	—	—	—	—	—	—	S12NPP	—	12.70	0.500	—

FLANGED SERIES

CYLINDRICAL O.D.

- Four sizes offered in flanged construction.
- Integral shoulders for mounting in through-bored housings.
- Straight outside diameters.
- Interchangeable with corresponding unflanged sizes.
- Available with double shields.
- Electric motor quality for applications where quietness is required.

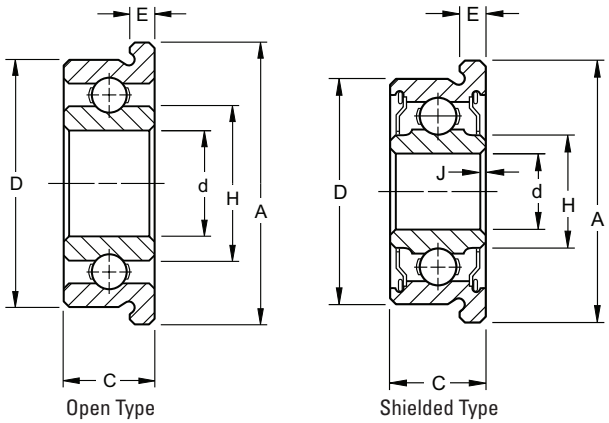

Open Type | Shielded Type

DIMENSIONS – TOLERANCES

Bearing Number		Bore d		chamfer J x 45°		Outside Diameter D		Width C		Inner Ring Shoulder		Flange A		E		Shielded Type Overall Width		H		Wt.		Static Load Rating C_0		Extended Dynamic Load Rating C_E[2]	
		+0.000 mm -0.008 mm		+0.25 mm -0.00 mm		+0.000 mm -0.010 mm		+0.00 mm -0.13 mm		H Min.		+0.13 mm -0.05 mm		±0.05 mm		+0.00 mm -0.13 mm		Min.							
open	shielded*	+0.0000″ -0.0003″		+0.010″ -0.000″		+0.000″ -0.0004″		+0.000″ -0.005″				+0.005″ -0.002″		±0.002″		+0.000″ -0.005″									
		mm	in.	mm	in.	mm	in.	mm	in.	mm	in.	mm	in.	mm	in.	mm	in.	mm	in.	kg	lbs.	N	lbs.	N	lbs.
F33K3	F33KDD3	3.175	0.1250	0.30	0.012	9.525	0.3750	3.96	0.156	5.13	0.202	11.18	0.440	0.76	0.030	3.96	0.156	4.65	0.183	0.005	0.01	212	48	710	160
F33K5	F33KDD5	4.762	0.1875	0.30	0.012	12.700	0.5000	3.96	0.156	6.86	0.270	14.35	0.565	1.07	0.042	4.98	0.196	6.30	0.248	0.005	0.01	490	110	1430	325
FS1K7	FS1KDD7[1]	6.350	0.2500	0.30	0.012	15.875	0.6250	4.98	0.196	8.86	0.349	17.53	0.690	1.07	0.042	4.98	0.196	8.43	0.332	0.005	0.01	560	125	1630	365
FS3K	FS3KDD[1]	9.525	0.3750	0.41	0.016	22.225	0.8750	5.56	0.219	13.13	0.517	24.61	0.969	1.57	0.062	7.14	0.281	12.06	0.475	0.009	0.02	1400	310	3650	830

[1] Also available in stainless steel. To specify, add prefix "A" before bearing number.
[2] Based on 10^6 revolutions of calculated fatigue life.
* Also available with two contact seals. To specify, replace "KDD" in part number with "PP".

TAPERED O.D.

- F Flanged series has shoulders integral with the bearings for mounting in through-bored housings.
- Used where compactness is essential or where it is not desirable to machine housing shoulders.
- All sizes in series have tapered outside diameters and are available with double shields.
- Suitable applications include precision instruments, packaging machinery and motion picture projectors.
- Several sizes in the series are manufactured in both standard bearing-quality, chromium-alloy, high-carbon steel and stainless steel (stainless steel specified by suffix "A").
- Electric motor quality where quietness is required.

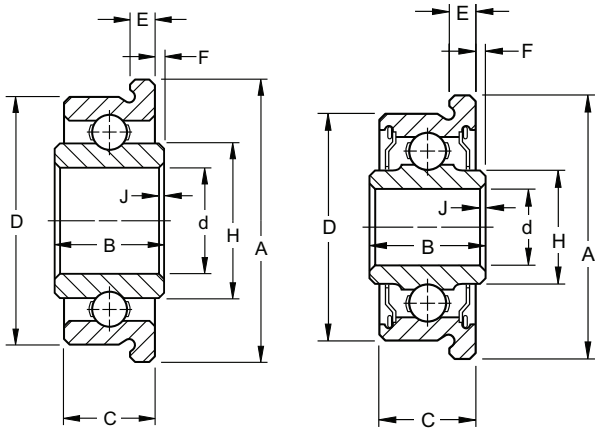

Open Type | Shielded Type

DIMENSIONS – TOLERANCES

Bearing Number		Bore d		chamfer J x 45°		Outside Diameter D		Inner Width B		Ring Widths Inner Project F		H[3]		Outer Width C		Taper Per Foot		Flange A		E		Wt.		Static Load Rating C_0		Extended Dynamic Load C_E[4]	
		+0.008 mm -0.00 mm		+0.025 mm -.00 mm		+0.000 mm -0.10 mm		±0.3 mm		±0.13 mm		Min.		+.00 mm -0.10 mm				+0.13 mm -0.05 mm		±0.05 mm							
open	shielded	+0.0003″ -0.0000″		+0.010″ -0.000″		+0.000″ -0.0004″		±0.010″		-0.005″				+0.000″ -0.004″				+0.005″ -0.002″		±0.002″							
		mm	in.	mm	in.	mm	in.	mm	in.	mm	in.	mm	in.	mm	in.	mm	in.	mm	in.	mm	in.	kg	lbs.	N	lbs.	N	lbs.
F2[1]	—	4.762	0.1875	0.25	0.010	11.130	0.4382	4.80	0.189	0.41	0.016	6.93	0.273	4.14	0.163	2.03	0.080	12.70	0.500	1.07	0.042	0.005	0.01	465	106	1160	260
—	F2DD-2	3.175	0.1250	0.25	0.010	9.534	0.3757	4.77	0.188	0.38	0.015	4.60	0.181	4.14	0.163	1.90	0.075	11.13	0.438	0.94	0.037	0.005	0.01	212	48	710	160
F3	—	4.762	0.1875	0.25	0.010	14.305	0.5632	5.54	0.218	0.38	0.015	6.93	0.273	4.95	0.195	2.03	0.080	15.88	0.625	1.07	0.042	0.005	0.01	490	110	1430	325
—	F3DD	4.762	0.1875	0.25	0.010	14.305	0.5632	6.35	0.250	0.38	0.015	6.22	0.245	5.74	0.226	1.73	0.068	15.88	0.625	1.07	0.042	0.005	0.01	490	110	1430	325
F4	F4DD	6.350	0.2500	0.25	0.010	15.893	0.6257	6.35	0.250	0.38	0.015	8.41	0.331	5.74	0.226	1.73	0.068	17.45	0.687	1.07	0.042	0.005	0.01	560	125	1630	365
F5	F5DD[2]	7.938	0.3125	0.25	0.010	17.480	0.6882	6.35	0.250	0.38	0.015	10.41	0.410[2]	5.74	0.226	1.73	0.068	19.05	0.750	1.07	0.042	0.005	0.01	865	196	2400	540

[1] Full type, no retainer. Not suggested for speeds over 500 RPM.
[2] H dimension is 9.68 mm (.381") for F5DD.
[3] Land dimension of the inner ring.
[4] Based on 10^6 revolutions of calculated fatigue life.

ST FLANGETTE UNIT

- Pressed steel housed units designed for light-duty applications.
- Available in shaft sizes from 6.35 mm - 12.7 mm ($^1/_4$ to $^1/_2$ inch).
- Designed to simplify mounting on side plate or frame-type housings.
- Two identical steel stampings house a clamp-type bearing with a spherical O.D. outer ring.
- Spherical inside surface of each stamping mates with the spherical O.D. of the bearing, providing initial self-alignment at mounting.
- Offers features of basic clamp-type bearing.
- Available with sealed or shielded construction.
- Radial load capacity is 25 percent of basic bearing's dynamic load rating at 33.3 RPM.
- Inspected to ABEC-1 tolerances, except bore.
- Suggested shaft tolerance: Nominal bore size to -.0005 in. resulting in .000 in. to .001 in. loose-shaft fit.

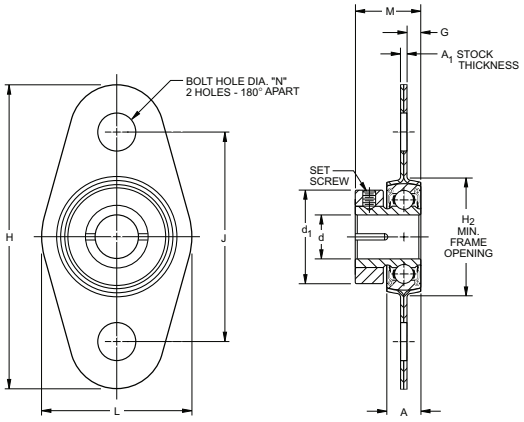

Unit Number	Bore** d +0.13 mm -0.000 mm +0.0005" -0.0000"		A		d1		H2		M		G		A1		H		L		J		N		Set-screw Thread*	Max. Radial Unit Load	
	mm	in.	mm	in.	mm	in.	mm	in.	mm	in.	mm	in.	mm	in.	mm	in.	mm	in.	mm	in.	mm	in.		N	lbs.
S1PPB7-3 ST	6.350	0.2500	5.556	7/32	14.287	9/16	19.844	25/32	10.922	0.430	2.007	0.079	0.683	0.0269	45.244	1 25/32	22.225	7/8	30.956	1 7/32	0.219	7/32	4-40	312	70
S3PPB15 ST	7.937	0.3125	7.144	9/32	19.844	25/32	27.781	1 3/32	14.275	0.562	2.718	0.107	0.836	0.0329	53.181	2 3/32	30.163	1 13/16	38.894	1 17/32	0.219	7/32	8-36	668	150
S5PPB2 ST	12.700	0.5000	7.937	5/16	23.019	29/32	32.544	1 9/32	15.875	0.625	3.048	0.120	0.912	0.0359	59.531	2 11/32	36.512	1 17/16	45.244	1 25/32	0.219	7/32	8-36	980	220

* All setscrews are hex socket oval point, six fluted socket setscrews available upon request. Setscrews with fused plastic patch available at added cost.

**Bore tolerance applies prior to collar assembly.

RTF-RUBBER TIRE FLANGE HOUSED UNIT

- Synthetic, conductive elastomer of Durometer hardness 80-85 facilitates mounting of standard cylindrical O.D. bearings in side plate of frame-type housings.
- Generous taper on entrance corner of rubber cartridge simplifies insertion of unit into side panel, assuring reasonable squareness of bearings when fully mounted.
- Bearing is positioned by integral flange of the rubber cartridge.
- Resiliency of elastomer accommodates wider than the standard suggested housing bore tolerance.
- Greater flexibility in adjusting to minor shaft and/or housing alignment.
- Helps reduce airborne noise and structural vibration.
- Additional advantages are similar to features of basic clamp-type bearing design.
- Due to deflection characteristics of the elastomer, radial and thrust ratings for the RTF Series are 10 percent of the basic bearing's dynamic load rating at 33.3 RPM.

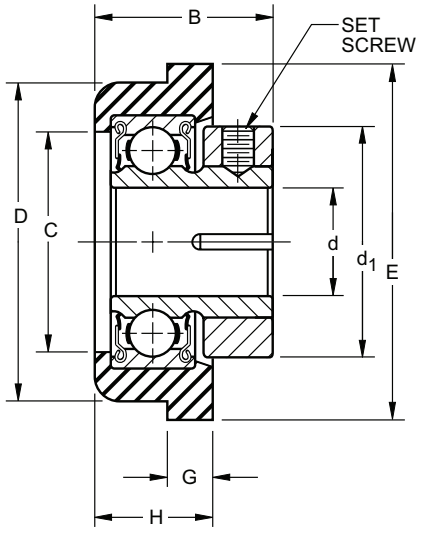

Unit Number	Bore** d +0.13 mm -0.000 mm +0.0005" -0.0000"		D RTF O.D. ±0.13 mm ±0.005"		D HSG Bore ±0.13 mm ±0.005"		C		d1		E		B		G		H		Set-screw Thread*	Max. Radial Unit Load	
	mm	in.	mm	in.	mm	in.	mm	in.	mm	in.	mm	in.	mm	in.	mm	in.	mm	in.		N	lbs.
S1PP73RTF	6.350	0.2500	19.355	0.762	19.050	0.750	13.494	17/32	14.287	9/16	22.225	7/8	11.906	15/32	1.984	5/64	7.541	19/64	4-40	116	26
S3PP16RTF	7.937	0.3125	27.280	1.074	26.975	1.062	19.050	3/4	19.844	25/32	30.956	1 7/32	15.875	5/8	3.969	5/32	10.319	13/32	8-36	258	58
S3PP4RTF	9.525	0.3750	27.280	1.074	26.975	1.062	19.050	3/4	19.844	25/32	30.956	1 7/32	15.875	5/8	3.969	5/32	10.319	13/32	8-36	258	58
S5PP2RTF	12.700	0.5000	35.255	1.388	34.925	1.375	25.400	1	23.019	29/32	38.894	1 17/32	17.859	45/64	3.969	5/32	11.906	15/32	8-36	392	88

* All setscrews are hex socket oval point, six fluted socket setscrews available upon request. Setscrews with fused plastic patch available at added cost.

**Bore tolerance applies prior to collar assembly.

SPECIAL BEARINGS

- Pulley, guide roller and pinch roll bearings:
  - Available in several bore sizes.
  - Lightweight, low inertia, low torque and accurate running characteristics with minimum runout and wobble.
  - Many units feature outer ring assemblies with integral molded tires.
  - Most common tire materials are aluminum, steel and a variety of engineered plastics such as nylon, polycarbonate, acetal resin or polyurethane.
  - Tire material and configuration are determined by application requirements.
  - Standard materials and shapes can be made in many sizes.
  - Timken engineering may assist in testing materials you feel are suitable for your applications.

- Timken universal ring design:
  - Sealed or shielded versions readily available in the most basic bearing sizes.
  - Varying degrees of seal drag, to suit the sealing torque requirements dictated by the environmental conditions of the application.

- Integral assembly design concept:
  - Complete package of bearings, housings, shafts, etc.
  - Assembled and ready to mount.
  - Custom designed to solve customer assembly problems and minimize inventory of multiple components.
  - Overall cost savings.
  - Bearing units shown have been developed especially for business machine applications.

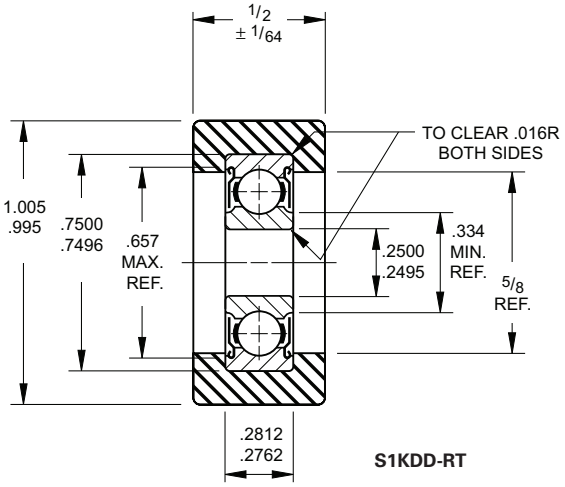

ULTRA LIGHT 9300K SERIES

- Designed for applications where housing diameters are restricted and it is desirable to maintain relatively large shaft diameters.
- Resembles the 9100K Series, except corresponding sizes of the 9300K Series have a somewhat thinner section.
- Used extensively in machine tools, textile machinery and jet engine gearbox applications.

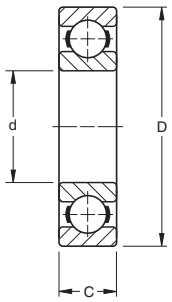

DIMENSIONS – TOLERANCES

Bearing Number	Bore d		tolerance +0.000 mm +0.0000" to minus		Outside Diameter D		tolerance +0.000 mm +0.0000" to minus		Width C		tolerance +0.000 mm +0.0000" to minus		Fillet Radius(1)		Wt.		Static Load Rating C_o		Extended Dynamic Load Rating C_E(4)	
	mm	in.	mm	in.	mm	in.	mm	in.	mm	in.	mm	in.	mm	in.	kg	lbs.	N	lbs.	N	lbs.
9301K	12	0.4724	0.008	0.0003	24	0.9449	0.009	0.00035	6	0.236	0.12	0.005	0.3	0.012	0.014	0.03	1600	360	3650	830
9302K	15	0.5906	0.008	0.0003	28	1.1024	0.009	0.00035	7	0.276	0.12	0.005	0.3	0.012	0.018	0.04	2270	510	4890	1100
9303K(2)	17	0.6693	0.008	0.0003	30	1.1811	0.009	0.00035	7	0.276	0.12	0.005	0.3	0.012	0.027	0.06	2540	570	5250	1180
9305K(2)	25	0.9843	0.010	0.0004	42	1.6535	0.011	0.00045	9	0.354	0.12	0.005	0.3	0.012	0.045	0.10	4540	1020	8010	1800
9306K(2)(3)	30	1.1811	0.010	0.0004	47	1.8504	0.011	0.00045	9	0.354	0.12	0.005	0.3	0.012	0.075	0.16	4980	1120	8270	1860
9307K	35	1.3780	0.012	0.00045	55	2.1654	0.013	0.0005	10	0.394	0.12	0.005	0.6	0.024	0.095	0.21	8010	1800	13300	3000
9308K	40	1.5748	0.012	0.00045	62	2.4409	0.013	0.0005	12	0.472	0.12	0.005	0.6	0.024	0.141	0.31	8900	2000	13800	3100
9310K	50	1.9685	0.012	0.00045	72	2.8346	0.013	0.0005	12	0.472	0.12	0.005	0.6	0.024	0.168	0.37	11560	2600	16700	3750
9311K	55	2.1654	0.015	0.0006	80	3.1496	0.013	0.0005	13	0.512*	0.15	0.006	1.0	0.039	0.209	0.46	14010	3150	18900	4250
9313K	65	2.5591	0.015	0.0006	90	3.5433	0.015	0.0006	13	0.512*	0.15	0.006	1.0	0.039	0.250	0.55	16010	3600	19600	4400
9316K	80	3.1496	0.015	0.0006	110	4.3307	0.015	0.0006	16	0.630*	0.15	0.006	1.0	0.039	0.363	0.80	24020	5400	28500	6400

(1) Maximum shaft or housing fillet radius that bearing corners will clear.
(2) Also available with rubber seals, e.g., 9303PP.
(3) Also available with two shields, e.g., 9306KDD.
(4) Based on 10^6 revolutions of calculated fatigue life.

* Width tolerance is +.00 mm to -.15 mm (+.000" to -.006").

EXTRA LIGHT 9100K SERIES

- For applications where housing diameters are restricted and it is desirable to maintain relatively large shaft diameters.
- Electric motor quality for applications where quietness is a requirement.

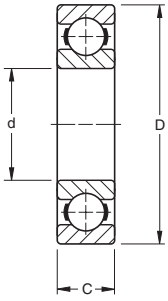

DIMENSIONS – TOLERANCES

Bearing Number	Bore d		tolerance +0.000 mm +0.0000" to minus		Outside Diameter D		tolerance +0.000 mm +0.0000" to minus		Width C		tolerance +0.000 mm +0.0000" to minus		Fillet Radius(1)		Wt.		Static Load Rating C_o		Extended Dynamic Load Rating C_E(2)	
	mm	in.	mm	in.	mm	in.	mm	in.	mm	in.	mm	in.	mm	in.	kg	lbs.	N	lbs.	N	lbs.
9100K	10	0.3937	0.008	0.0003	26	1.0236	0.009	0.00035	8	0.3150	0.12	0.005	0.3	0.012	0.018	0.04	1960	440	5160	1160
9101K	12	0.4724	0.008	0.0003	28	1.1024	0.009	0.00035	8	0.3150	0.12	0.005	0.3	0.012	0.018	0.04	2360	530	5870	1320
9102K	15	0.5906	0.008	0.0003	32	1.2598	0.011	0.00045	9	0.3543	0.12	0.005	0.3	0.012	0.027	0.06	2800	630	6360	1430
9103K	17	0.6693	0.008	0.0003	35	1.3780	0.011	0.00045	10	0.3937	0.12	0.005	0.3	0.012	0.041	0.09	3200	720	6800	1530
9104K	20	0.7874	0.010	0.0004	42	1.6535	0.011	0.00045	12	0.4724	0.12	0.005	0.6	0.024	0.073	0.16	5000	1120	10700	2400
9105K	25	0.9843	0.010	0.0004	47	1.8504	0.011	0.00045	12	0.4724	0.12	0.005	0.6	0.024	0.077	0.17	5740	1290	11300	2550
9106K	30	1.1811	0.010	0.0004	55	2.1654	0.013	0.0005	13	0.5118	0.12	0.005	1.0	0.039	0.118	0.26	8010	1800	14600	3350
9107K	35	1.3780	0.012	0.00045	62	2.4409	0.013	0.0005	14	0.5512	0.12	0.005	1.0	0.039	0.145	0.32	9960	2240	18000	4050
9108K	40	1.5748	0.012	0.00045	68	2.6772	0.013	0.0005	15	0.5906	0.12	0.005	1.0	0.039	0.195	0.43	12200	2750	20000	4500
9109K	45	1.7717	0.012	0.00045	75	2.9528	0.013	0.0005	16	0.6299	0.12	0.005	1.0	0.039	0.249	0.55	14900	3350	24000	5400
9110K	50	1.9685	0.012	0.00045	80	3.1496	0.013	0.0005	16	0.6299	0.12	0.005	1.0	0.039	0.272	0.60	16000	3600	24900	5600
9111K	55	2.1654	0.015	0.0006	90	3.5433	0.015	0.0006	18	0.7087	0.15	0.006	1.0	0.039	0.390	0.86	20700	4650	32000	7200
9112K	60	2.3622	0.015	0.0006	95	3.7402	0.015	0.0006	18	0.7087	0.15	0.006	1.0	0.039	0.417	0.92	22600	5100	33400	7500
9113K	65	2.5591	0.015	0.0006	100	3.9370	0.015	0.0006	18	0.7087	0.15	0.006	1.0	0.039	0.445	0.98	24500	5500	34700	7800
9114K	70	2.7559	0.015	0.0006	110	4.3307	0.015	0.0006	20	0.7874	0.15	0.006	1.0	0.039	0.630	1.39	29800	6700	43200	9720
9115K	75	2.9528	0.015	0.0006	115	4.5276	0.015	0.0006	20	0.7874	0.15	0.006	1.0	0.039	0.680	1.50	32700	7350	44500	10000
9116K	80	3.1496	0.015	0.0006	125	4.9213	0.018	0.0007	22	0.8661	0.15	0.006	1.0	0.039	0.885	1.95	35600	8000	54300	12200
9117K	85	3.3465	0.020	0.0008	130	5.1181	0.018	0.0007	22	0.8661	0.20	0.008	1.0	0.039	0.966	2.13	35600	8000	56500	12700
9118K	90	3.5433	0.020	0.0008	140	5.5118	0.018	0.0007	24	0.9449	0.20	0.008	1.5	0.059	1.157	2.55	48000	10800	66700	15000
9119K	95	3.7402	0.020	0.0008	145	5.7087	0.018	0.0007	24	0.9449	0.20	0.008	1.5	0.059	1.188	2.62	52500	11800	68100	15300
9120K	100	3.9370	0.020	0.0008	150	5.9055	0.018	0.0007	24	0.9449	0.20	0.008	1.5	0.059	1.315	2.90	52500	11800	68100	15300

(1) Maximum shaft or housing fillet radius that bearing corners will clear.
(2) Based on 10^6 revolutions of calculated fatigue life.

Continued on the next page.

EXTRA LIGHT 9100K SERIES *(continued)*

DIMENSIONS – TOLERANCES

Bearing Number	Bore d		tolerance +0.000 mm +0.0000" to minus		Outside Diameter D		tolerance +0.000 mm +0.0000" to minus		Width C		tolerance +0.000 mm +0.0000" to minus		Fillet Radius(1)		Wt.		Static Load Rating C_o		Extended Dynamic Load Rating C_E(2)	
	mm	in.	mm	in.	mm	in.	mm	in.	mm	in.	mm	in.	mm	in.	kg	lbs.	N	lbs.	N	lbs.
9121K	105	4.1339	0.020	0.0008	160	6.2992	0.025	0.0010	26	1.0236	0.20	0.008	2.0	0.079	1.6	3.6	59600	13400	76900	17600
9122K	110	4.3307	0.020	0.0008	170	6.6929	0.025	0.0010	28	1.1024	0.20	0.008	2.0	0.080	—	—	71100	16000	92500	20800
9124K	120	4.7244	0.020	0.0008	180	7.0866	0.025	0.0010	28	1.1024	0.20	0.008	2.0	0.079	2.2	4.9	71100	16000	88900	20000
9126K	130	5.1181	0.025	0.0010	200	7.8740	0.030	0.0012	33	1.2992	0.25	0.010	2.0	0.079	3.4	7.4	90700	20400	115600	26000
9128K	140	5.5118	0.025	0.0010	210	8.2677	0.030	0.0012	33	1.2992	0.25	0.010	2.0	0.080	3.6	8.0	105000	23600	124500	28000
9130K	150	5.9055	0.025	0.0010	225	8.8583	0.030	0.0012	35	1.3780	0.25	0.010	2.0	0.080	5.5	12.0	92500	20800	113400	25500
9132K	160	6.2992	0.025	0.0010	240	9.4488	0.030	0.0012	38	1.4961	0.25	0.010	2.0	0.080	6.7	14.8	138000	31000	166800	37500
9134K	170	6.6929	0.025	0.0010	260	10.2362	0.035	0.0014	42	1.6535	0.25	0.010	2.0	0.080	9.0	19.8	160000	36000	189000	42500
9136K	180	7.0866	0.025	0.0010	280	11.0236	0.035	0.0014	44	1.8110	0.25	0.010	2.0	0.080	11.0	24.3	195700	44000	222000	50000
9138K	190	7.4803	0.030	0.0012	290	11.4173	0.035	0.0014	46	1.8110	0.30	0.012	2.0	0.080	12.0	26.5	204000	45500	216000	48000
9140K	200	7.8740	0.030	0.0012	310	12.2047	0.035	0.0014	51	2.0079	0.30	0.012	2.0	0.080	15.4	34.0	245000	55000	245000	55000
9144K	220	8.6614	0.030	0.0012	340	13.3858	0.040	0.0016	56	2.2047	0.30	0.012	2.5	0.100	20.0	44.2	290000	65500	280000	63000
9146K	240	9.4488	0.030	0.0012	360	14.1732	0.040	0.0016	56	2.2047	0.30	0.012	2.5	0.100	21.5	47.3	320000	72000	290000	65500
9152K	260	10.2362	0.035	0.0014	400	15.7480	0.040	0.0016	65	2.5591	0.35	0.014	3.0	0.120	31.6	69.6	400000	90000	345000	78000
9156K	280	11.0236	0.035	0.0014	420	16.5354	0.045	0.0018	65	2.5591	0.35	0.014	3.0	0.120	33.5	73.8	355000	80000	360000	80000
9160K	300	11.8110	0.035	0.0014	460	18.1102	0.045	0.0018	74	2.9134	0.35	0.014	3.0	0.120	46.6	102.9	520000	118000	415000	93000
9164K	320	12.5984	0.040	0.0016	480	18.8976	0.045	0.0018	74	2.9134	0.40	0.016	3.0	0.120	49.1	108.3	570000	127000	430000	98000
9180K	400	15.7480	0.040	0.0016	600	23.6220	0.050	0.0020	90	3.5433	0.40	0.016	4.0	0.160	—	—	815000	180000	550000	122000

(1) Maximum shaft or housing fillet radius that bearing corners will clear.
(2) Based on 10^6 revolutions of calculated fatigue life.

SHIELDS, SEALS AND SNAP RING COMBINATIONS

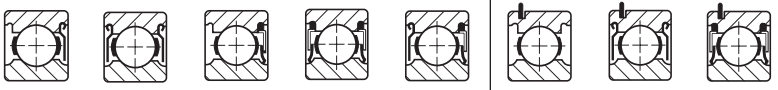

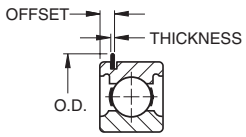

One Shield D	Two Shields DD	One Seal P	Two Seals PP	One Shield And Seal PD	Open Type G	Two Shields DDG	Two Seals PPG	O.D.		Thickness		Offset	
								mm	in.	mm	in.	mm	in.
9100KD	9100KDD	9100P	9100PP	9100PD	—	—	—	—	—	—	—	—	—
9101KD	9101KDD	9101P	9101PP	9101PD	—	—	—	—	—	—	—	—	—
9102KD	9102KDD	9102P	9102PP	—	9102KG	9102KDDG	9102PPG	36.5	1 7/16	1.07	0.042	3.05	0.120
9103KD	9103KDD	9103P	9103PP	9103PD2(2)	9103KG	9103KDDG	9103PPG	39.3	1 35/64	1.07	0.042	3.05	0.120
9104KD	9104KDD	9104P	9104PP	—	9104KG	9104KDDG	9104PPG	46.0	1 13/16	1.07	0.042	3.05	0.120
9105KD	9105KDD	9105P	9105PP	—	—	—	—	52.4	2 1/16	1.07	0.042	3.05	0.120
9106KD	9106KDD	9106P	9106PP	9106PD	9106KG	9106KDDG	9106PPG	60.3	2 3/8	1.07	0.042	3.05	0.120
9107KD	9107KDD	9107P	9107PP	—	9107KG	9107KDDG	9107PPG	67.5	2 21/32	1.65	0.065	3.63	0.143
9108KD	9108KDD	9108P	9108PP	—	9108KG	9108KDDG	9108PPG	74.2	2 59/64	1.65	0.065	4.04	0.159
9109KD	9109KDD	9109P	9109PP	9109PD	9109KG	9109KDDG	9109PPG	81.4	3 13/64	1.65	0.065	4.04	0.159
9110KD	9110KDD	9110P	9110PP	—	9110KG	—	—	86.5	3 13/32	1.65	0.065	4.04	0.159
9111KD	9111KDD	9111P	9111PP	—	9111KG	—	9111PPG	96.4	3 51/64	2.41	0.095	5.18	0.204
9112KD	9112KDD	9112P	9112PP	—	9112KG	—	—	101.2	3 63/64	2.41	0.095	5.18	0.204
9113KD	9113KDD	9113P	9113PP	9113PD	9113KG	—	9113PPG	106.4	4 3/16	2.41	0.095	5.18	0.204
9114KD	9114KDD	9114P	9114PP	—	9114KG	—	—	116.3	4 37/64	2.41	0.095	5.18	0.204
9115KD	9115KDD	9115P	9115PP	—	—	—	—	121.4	4 25/32	2.41	0.095	5.18	0.204
—	—	—	—	—	—	—	—	—	—	—	—	—	—
9117KD	—	—	—	—	9117KG	9117KDDG	—	139.7	5 1/2	2.77	0.109	5.54	0.218
—	—	—	—	—	—	—	—	—	—	—	—	—	—
—	—	—	—	—	—	—	—	—	—	—	—	—	—
9120KD	—	—	9120NPP	—	—	—	—	159.5	6 9/32	2.77	0.109	6.35	0.250
9121KD	—	—	—	—	—	—	—	169.5	6 43/64	2.77	0.109	6.35	0.250
—	—	—	—	—	—	—	—	—	—	—	—	—	—
9124KD	—	9124P	9124PP	—	9124KG	—	—	192.9	7 19/32	3.05	0.120	6.63	0.261
—	—	—	—	—	—	—	—	—	—	—	—	—	—
—	—	—	—	—	—	—	—	—	—	—	—	—	—

(1) The snap ring is normally packaged separately in the box with bearing.
(2) Width of bearing is 12.700 mm (.5000").

LIGHT 200K SERIES

- Conrad-type bearing is well-balanced, with deep races and uninterrupted race shoulders. Excellent, general-purpose bearing.
- Capacity to carry radial and thrust in either direction or combined loads.
- Electric motor quality for applications where quietness is a requirement.

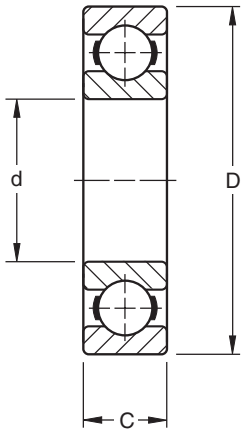

DIMENSIONS – TOLERANCES

Bearing Number	Bore d		tolerance +0.000 mm +0.0000" to minus		Outside Diameter D		tolerance +0.000 mm +0.0000" to minus		Width C		tolerance +0.000 mm +0.0000" to minus		Fillet Radius(1)		Wt.		Static Load Rating C_o		Extended Dynamic Load Rating C_E(2)	
	mm	in.	mm	in.	mm	in.	mm	in.	mm	in.	mm	in.	mm	in.	kg	lbs.	N	lbs.	N	lbs.
200K	10	0.3937	0.008	0.0003	30	1.1811	0.009	0.00035	9	0.3543	0.12	0.005	0.6	0.024	0.027	0.06	2600	585	6800	1530
201K	12	0.4724	0.008	0.0003	32	1.2598	0.011	0.00043	10	0.3937	0.12	0.005	0.6	0.024	0.036	0.08	3000	680	7600	1730
202K	15	0.5906	0.008	0.0003	35	1.3780	0.011	0.00043	11	0.4331	0.12	0.005	0.6	0.024	0.041	0.09	3470	830	8650	1930
203K	17	0.6693	0.008	0.0003	40	1.5748	0.011	0.00043	12	0.4724	0.12	0.005	0.6	0.024	0.064	0.14	4700	1060	10900	2450
204K	20	0.7874	0.010	0.0004	47	1.8504	0.011	0.00043	14	0.5512	0.12	0.005	1.0	0.039	0.104	0.23	6500	1460	14400	3250
205K	25	0.9843	0.010	0.0004	52	2.0472	0.013	0.0005	15	0.5906	0.12	0.005	1.0	0.039	0.127	0.28	7800	1760	16000	3600
206K	30	1.1811	0.010	0.0004	62	2.4409	0.013	0.0005	16	0.6299	0.12	0.005	1.0	0.039	0.195	0.43	11300	2550	22200	5000
207K	35	1.3780	0.012	0.00047	72	2.8346	0.013	0.0005	17	0.6693	0.12	0.005	1.0	0.039	0.290	0.64	15300	3450	29100	6550
208K	40	1.5748	0.012	0.00047	80	3.1496	0.013	0.0005	18	0.7087	0.12	0.005	1.0	0.039	0.376	0.83	19800	4460	36200	8130
209K	45	1.7717	0.012	0.00047	85	3.3465	0.015	0.0006	19	0.7480	0.12	0.005	1.0	0.039	0.426	0.94	20500	4600	36300	8160
210K	50	1.9685	0.012	0.00047	90	3.5433	0.015	0.0006	20	0.7874	0.12	0.005	1.0	0.039	0.476	1.05	23100	5200	40000	9000
211K	55	2.1654	0.015	0.0006	100	3.9370	0.015	0.0006	21	0.8268	0.15	0.006	1.5	0.059	0.635	1.40	29100	6550	49000	11000
212K	60	2.3622	0.015	0.0006	110	4.3307	0.015	0.0006	22	0.8661	0.15	0.006	1.5	0.059	0.807	1.78	35500	8000	62100	13400
213K	65	2.5591	0.015	0.0006	120	4.7244	0.015	0.0006	23	0.9055	0.15	0.006	1.5	0.059	1.016	2.24	39900	9000	62100	14600
214K	70	2.7559	0.015	0.0006	125	4.9213	0.018	0.0007	24	0.9449	0.15	0.006	1.5	0.059	1.107	2.44	44000	9890	69000	15500
215K	75	2.9528	0.015	0.0006	130	5.1181	0.018	0.0007	25	0.9843	0.15	0.006	1.5	0.059	1.198	2.64	44800	10100	68900	15500
216K	80	3.1496	0.015	0.0006	140	5.5118	0.018	0.0007	26	1.0236	0.15	0.006	2.0	0.079	1.483	3.27	54200	12200	81300	18300
217K	85	3.3465	0.020	0.0008	150	5.9055	0.018	0.0007	28	1.1024	0.20	0.008	2.0	0.079	1.860	4.10	62200	14000	95900	21600
218K	90	3.5433	0.020	0.0008	160	6.2992	0.025	0.0010	30	1.1811	0.20	0.008	2.0	0.079	2.209	4.87	71100	16000	109000	24500
220K	100	3.9370	0.020	0.0008	180	7.0866	0.025	0.0010	34	1.3386	0.20	0.008	2.0	0.080	4.077	8.98	93000	20800	134000	30500
221K	105	4.1339	0.020	0.0008	190	7.4803	0.030	0.0012	36	1.4173	0.20	0.008	2.0	0.080	3.777	8.32	93000	20800	127000	28500
222K	110	4.3307	0.020	0.0008	200	7.8740	0.030	0.0012	38	1.4961	0.20	0.008	2.0	0.080	4.300	9.47	104900	23600	153000	34500
224K	120	4.7244	0.020	0.0008	215	8.4646	0.030	0.0012	40	1.5748	0.20	0.008	2.0	0.080	7.064	15.56	133000	30000	173000	39000
226K	130	5.1181	0.020	0.0010	230	9.0551	0.030	0.0012	40	1.5748	0.25	0.010	3.0	0.120	6.642	14.63	149000	33500	189000	42500
228K	140	5.5118	0.025	0.0010	250	9.8425	0.030	0.0012	42	1.6535	0.25	0.010	3.0	0.120	11.196	24.66	162000	36500	200000	45000
230K	150	5.9055	0.025	0.0010	270	10.6299	0.035	0.0014	45	1.7717	0.25	0.010	3.0	0.120	12.17	26.8	180000	40500	218000	49000
232K	160	6.2992	0.025	0.0010	290	11.4173	0.035	0.0014	48	1.8898	0.25	0.010	3.0	0.120	15.03	33.1	235000	53000	260000	58500
234K	170	6.6929	0.025	0.0010	310	12.2047	0.035	0.0014	52	2.0472	0.25	0.010	4.0	0.160	18.66	41.1	276000	62000	291000	65500
236K	180	7.0866	0.025	0.0010	320	12.5984	0.040	0.0016	52	2.0472	0.25	0.010	4.0	0.160	19.39	42.7	298000	67000	309000	69500
238K	190	7.4803	0.030	0.0012	340	13.3858	0.040	0.0016	55	2.1654	0.30	0.012	4.0	0.160	23.02	50.7	290000	65000	300000	67000
240K	200	7.8740	0.030	0.0012	360	14.1732	0.040	0.0016	58	2.2835	0.30	0.012	4.0	0.160	26.42	58.2	375000	83000	355000	80000
242K	210	8.2677	0.030	0.0012	380	14.9606	0.040	0.0016	61	2.4016	0.30	0.012	4.0.	0.160	32.42	71.4	335000	76500	325000	73500
244K	220	8.6614	0.030	0.0012	400	15.7480	0.040	0.0016	65	2.5591	0.30	0.012	4.0	0.160	36.96	81.4	380000	86500	355000	80000
246K	230	9.0551	0.030	0.0012	420	16.5354	0.045	0.0018	68	2.6772	0.30	0.012	4.0	0.160	42.36	93.3	425000	95000	380000	85000
248K	240	9.4488	0.030	0.0012	440	17.3228	0.045	0.0018	72	2.8346	0.30	0.012	4.0	0.160	46.81	103.1	520000	116000	455000	102000
250K	250	9.8425	0.035	0.0014	460	18.1102	0.045	0.0018	76	2.9921	0.30	0.012	4.0	0.160	55.57	122.4	585000	129000	490000	110000
252K	260	10.2362	0.035	0.0014	480	18.8976	0.045	0.0018	80	3.1496	0.35	0.014	5.0	0.200	63.11	139.0	640000	143000	520000	118000
256K	280	11.0236	0.035	0.0014	500	19.6850	0.045	0.0018	80	3.1496	0.35	0.014	5.0	0.200	64.20	141.4	710000	160000	560000	125000
260K	300	11.8110	0.035	0.0014	540	21.2598	0.050	0.0020	85	3.3465	0.35	0.014	5.0	0.200	87.49	192.7	670000	150000	520000	116000
264K	320	12.5984	0.040	0.0016	580	22.8346	0.050	0.0020	92	3.6220	0.40	0.016	5.0	0.200	94.66	208.5	980000	220000	710000	160000

(1) Maximum shaft or housing fillet radius that bearing corners will clear.
(2) Based on 10^6 revolutions of calculated fatigue life.

SHIELDS, SEALS AND SNAP RING COMBINATIONS

Shields and Seals | **Snap Ring (Wireloc) (1)**

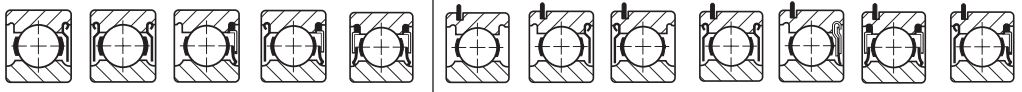

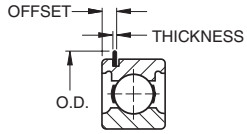

One Shield D	Two Shields DD	One Seal (N) P	One Seal One Shield PD	Two(3) Seals (N) PP	Open Type G	One Shield DG	One Shield GD	Two Shields DDG	One Seal PG	Two Seals PPG	One Seal One Shield PDG	O.D. Snap Ring		Thickness		Offset	
												mm	in.	mm	in.	mm	in.
200KD	200KDD	200P	200PD(2)	200PP	—	—	—	200KDDG	—	200PPG	—	34.5	1 23/64	1.07	0.042	3.05	0.120
201KD	201KDD	201P	201PD	201PP	201KG	201KDG	—	201KDDG	—	201PPG	—	36.5	1 7/16	1.07	0.042	3.05	0.120
202KD	202KDD	202P	202PD	202PP	202KG	202KDG	—	202KDDG	—	202PPG	—	39.3	1 35/64	1.07	0.042	3.05	0.120
203KD	203KDD	203P	203PD	203PP	203KG	203KDG	—	203KDDG	—	203PPG	—	44.4	1 3/4	1.07	0.042	3.05	0.120
204KD	204KDD	204P	204PD	204PP	204KG	204KDG	—	204KDDG	—	204PPG	—	52.4	2 1/16	1.07	0.042	3.45	0.136
205KD	205KDD	205P	205PD	205PP	205KG	205KDG	—	205KDDG	—	205PPG	—	57.5	2 17/64	1.07	0.042	3.45	0.136
206KD	206KDD	206P	206PD	206PP	206KG	206KDG	—	206KDDG	—	206PPG	—	67.6	2 21/32	1.65	0.065	4.83	0.190
207KD	207KDD	207P	207PD	207PP	207KG	207KDG	—	207KDDG	—	207PPG	—	78.2	3 5/64	1.65	0.065	4.83	0.190
208KD	208KDD	208P	—	208PP	208KG	208KDG	—	208KDDG	—	208PPG	—	86.5	3 13/32	1.65	0.065	4.83	0.190
209KD	209KDD	209P	—	209PP	209KG	209KDG	—	209KDDG	—	—	—	91.3	3 19/32	1.65	0.065	4.83	0.190
210KD	210KDD	210P	—	210PP	210KG	210KDG	—	210KDDG	—	210NPPG	—	96.4	3 51/64	2.41	0.095	5.59	0.220
211KD	211KDD	211NP	211NPD	211NPP	211KG	211KDG	211KGD	211KDDG	—	211NPPG	211NPDG	106.3	4 3/16	2.41	0.095	5.59	0.220
212KD	212KDD	212NP	212NPD	212NPP	212KG	212KDG	—	—	—	212NPPG	212NPDG	116.3	4 37/64	2.41	0.095	5.59	0.220
213KD	213KDD	213NP	—	213NPP	213KG	—	—	213KDDG	—	213NPPG	213NPDG	129.4	5 3/32	2.77	0.109	6.73	0.265
214KD	214KDD	214P	—	214NPP	214KG	214KDG	—	—	—	—	—	134.5	5 19/64	2.77	0.109	6.73	0.265
215KD	215KDD	215P	—	215NPP	—	—	—	—	—	—	—	—	—	—	—	—	—
216KD	216KDD	—	—	216NPP	—	—	—	—	—	—	—	—	—	—	—	—	—
217KD	217KDD	—	—	—	—	—	—	—	—	—	—	—	—	—	—	—	—
218KD	218KDD	—	—	—	—	—	—	—	—	—	—	—	—	—	—	—	—
—	—	—	—	—	—	—	—	—	—	—	—	—	—	—	—	—	—
—	—	—	—	—	—	—	—	—	—	—	—	—	—	—	—	—	—
222KD	—	—	—	—	—	—	—	—	—	—	—	—	—	—	—	—	—

(1) The snap ring is normally packaged separately in the box with the bearing.
(2) Available with snap ring as 200PDG.
(3) Also available in "VV" sealed design. Check for availability.
Note: "N" prefix for NP(P) seals indicate non-removable seal.

LIGHT 200W SERIES

- 200W Series, maximum capacity type, is dimensionally interchangeable with the 200K type, but has greater capacity for supporting heavier radial loads and light thrust loads in either direction.
- Maximum capacity bearings feature a filling slot in shoulder of each raceway to assemble an extra-large complement of balls.
- Consult your Timken representative for the availability of sizes other than those listed here.

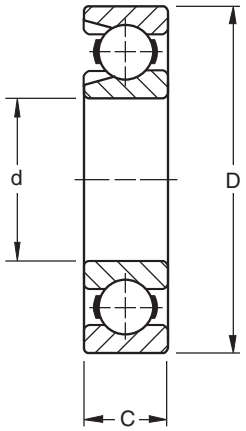

DIMENSIONS – TOLERANCES

Bearing Number	Bore d tolerance +0.000 mm +0.0000" to minus				Outside Diameter D tolerance +0.000 mm +0.0000" to minus				Width C tolerance +0.000 mm +0.0000" to minus				Fillet Radius[1]		Wt.		Static Load Rating C_o		Extended Dynamic Load Rating* C_E[3]	
	mm	in.	mm	in.	mm	in.	mm	in.	mm	in.	mm	in.	mm	in.	kg	lbs.	N	lbs.	N	lbs.
202W	15	0.5906	0.008	0.0003	35	1.3780	0.011	0.00045	11	0.4331	0.12	0.005	0.6	0.024	0.054	0.12	5060	1140	11000	2450
204W[2]	20	0.7874	0.010	0.0004	47	1.8504	0.011	0.00045	14	0.5512	0.12	0.005	1.0	0.039	0.113	0.25	9300	2120	19500	4400
205W[2]	25	0.9843	0.010	0.0004	52	2.0472	0.013	0.0005	15	0.5906	0.12	0.005	1.0	0.039	0.141	0.31	12200	2750	22600	5100
206W	30	1.1811	0.010	0.0004	62	2.4409	0.013	0.0005	16	0.6299	0.12	0.005	1.0	0.039	0.213	0.47	16900	3800	31000	6950
207W	35	1.3780	0.012	0.00047	72	2.8346	0.013	0.0005	17	0.6693	0.12	0.005	1.0	0.039	0.313	0.69	22600	5100	40000	9000
208W	40	1.5748	0.012	0.00047	80	3.1496	0.013	0.0005	18	0.7087	0.12	0.005	1.0	0.039	0.413	0.91	28400	6400	47000	10600
209W	45	1.7717	0.012	0.00047	85	3.3465	0.015	0.0006	19	0.7480	0.12	0.005	1.0	0.039	0.463	1.02	31500	7100	50000	11200
210W	50	1.9685	0.012	0.00047	90	3.5433	0.015	0.0006	20	0.7874	0.12	0.005	1.0	0.039	0.522	1.15	34600	7800	52000	11800
211W	55	2.1654	0.015	0.0006	100	3.9370	0.015	0.0006	21	0.8268	0.15	0.006	1.5	0.059	0.681	1.50	40600	9150	61000	13700
212W	60	2.3622	0.015	0.0006	110	4.3307	0.015	0.0006	22	0.8661	0.15	0.006	1.5	0.059	0.885	1.95	54200	12200	78000	17600
213W	65	2.5591	0.015	0.0006	120	4.7244	0.015	0.0006	23	0.9055	0.15	0.006	1.5	0.059	1.207	2.66	64800	14600	92000	20800
214W	70	2.7559	0.015	0.0006	125	4.9213	0.018	0.0007	24	0.9449	0.15	0.006	1.5	0.059	1.225	2.70	71100	16000	96000	21600
215W	75	2.9528	0.015	0.0006	130	5.1181	0.018	0.0007	25	0.9843	0.15	0.006	1.5	0.059	1.334	2.94	75500	17000	99000	22400
216W	80	3.1496	0.015	0.0006	140	5.5118	0.018	0.0007	26	1.0236	0.15	0.006	2.0	0.079	1.633	3.60	90600	20400	114000	26000
217W	85	3.3465	0.020	0.0008	150	5.9055	0.018	0.0007	28	1.1024	0.20	0.008	2.0	0.079	2.019	4.45	96000	22400	129000	29000
218W	90	3.5433	0.020	0.0008	160	6.2992	0.025	0.0010	30	1.1811	0.20	0.008	2.0	0.079	2.493	5.49	96500	25500	149000	33500
219W	95	3.7402	0.020	0.0008	170	6.6929	0.025	0.0010	32	1.2598	0.20	0.008	2.0	0.079	3.039	6.70	112000	29000	169000	38000
220W	100	3.9370	0.020	0.0008	180	7.0866	0.025	0.0010	34	1.3386	0.20	0.008	2.0	0.080	3.673	8.09	127000	33500	188000	42500
221W	105	4.1339	0.020	0.0008	190	7.4803	0.030	0.0012	36	1.4173	0.20	0.008	2.0	0.080	4.277	9.43	134000	35500	195000	44000
222W	110	4.3307	0.020	0.0008	200	7.8740	0.030	0.0012	38	1.4961	0.20	0.008	2.0	0.080	5.144	11.34	160000	42500	222000	50000
224W3	120	4.7244	0.020	0.0008	215	8.4646	0.030	0.0012	40	1.5748	0.25	0.010	2.0	0.080	6.586	14.52	156000	41500	222000	50000
226W3	130	5.1181	0.020	0.0010	230	9.0551	0.030	0.0012	40	1.5748	0.25	0.010	3.0	0.120	7.627	16.80	196000	53000	260000	58500
228W3	140	5.5118	0.025	0.0010	250	9.8425	0.030	0.0012	42	1.6535	0.25	0.010	3.0	0.120	9.307	20.50	260000	58500	270000	61000
230W	150	5.9055	0.025	0.0010	270	10.6299	0.035	0.0014	45	1.7717	0.25	0.010	3.0	0.120	12.485	27.50	290000	65500	300000	67000
232W	160	6.2992	0.025	0.0010	290	11.4173	0.035	0.0014	48	1.8898	0.25	0.010	3.0	0.120	15.436	34.00	340000	76500	325000	73500
234W	170	6.6929	0.025	0.0010	310	12.2047	0.035	0.0014	52	2.0472	0.25	0.010	4.0	0.160	19.068	42.00	375000	85000	345000	78000
236W	180	7.0866	0.025	0.0010	320	12.5984	0.040	0.0016	52	2.0472	0.25	0.010	4.0	0.160	19.886	43.80	405000	90000	365000	81500
238W	190	7.4803	0.030	0.0012	340	13.3858	0.040	0.0016	55	2.1654	0.30	0.012	4.0	0.160	23.608	52.00	465000	104000	405000	91500
240W	200	7.8740	0.030	0.0012	360	14.1732	0.040	0.0016	58	2.2835	0.30	0.012	4.0	0.160	27.150	59.80	560000	125000	465000	106000
242W	210	8.2677	0.030	0.0012	380	14.9606	0.040	0.0016	61	2.4016	0.30	0.012	4.0	0.160	33.279	73.30	570000	129000	465000	104000
244W	220	8.6614	0.030	0.0012	400	15.7480	0.040	0.0016	65	2.5591	0.30	0.012	4.0	0.160	38.091	83.90	680000	153000	530000	120000
246W	230	9.0551	0.030	0.0012	420	16.5354	0.045	0.0018	68	2.6772	0.30	0.012	4.0	0.160	45.719	100.70	695000	156000	530000	118000
248W	240	9.4488	0.030	0.0012	440	17.3228	0.045	0.0018	72	2.8346	0.30	0.012	4.0	0.160	48.761	107.40	865000	193000	640000	143000
250W	250	9.8425	0.030	0.0012	460	18.1102	0.045	0.0018	76	2.9921	0.30	0.012	4.0	0.160	57.568	126.80	930000	208000	670000	150000
252W	260	10.2362	0.035	0.0014	480	18.8976	0.045	0.0018	80	3.1496	0.35	0.014	5.0	0.200	65.468	144.20	1020000	232000	720000	160000
256W	280	11.0236	0.035	0.0014	500	19.6850	0.045	0.0018	80	3.1496	0.35	0.014	5.0	0.200	66.921	147.40	1120000	255000	765000	170000
260W	300	11.8110	0.035	0.0014	540	21.2598	0.050	0.0020	85	3.3465	0.35	0.014	5.0	0.200	89.894	198.00	1100000	245000	720000	160000
264W	320	12.5984	0.040	0.0016	580	22.8346	0.050	0.0020	92	3.6220	0.40	0.016	5.0	0.200	99.473	219.10	1560000	355000	965000	216000

[1] Maximum shaft or housing fillet radius that bearing corners will clear.
[2] These sizes have molded nylon cages.
[3] Based on 10^6 revolutions of calculated fatigue life.

* For applications where thrust load exceeds 60% of radial load, consult your Timken representative.

Listed in the table below are Timken maximum capacity type bearings (200W Series) with shields, seals and snap ring combinations.

The suffixes of the bearing numbers denote the following:

- **WD** - Filling slot opposite single shield
- **WNP** - Filling slot opposite single seal
- **WG** - Filling slot opposite snap ring
- **WDD** - Two shields
- **WNPP** - Two seals
- **WDG** - Filling slot and snap ring opposite shield
- **WDDG** - Two shields with filling slot opposite snap ring

SHIELDS, SEALS AND SNAP RING COMBINATIONS

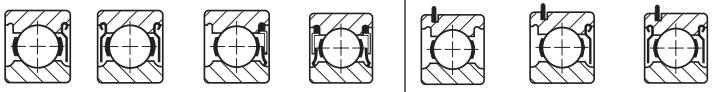

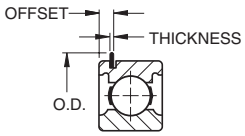

Shields and Seals				Snap Ring (Wireloc)[1]									
One Shield D	Two Shields DD	One Seal P	Two Seals PP	Open Type G	One Shield DG	Two Shields DDG	O.D.		Thickness		Offset	
							mm	in.	mm	in.	mm	in.
204WD	—	—	—	204WG	—	—	52.4	2 1/16	1.07	0.042	3.45	0.136
205WD	—	—	—	205WG	—	—	57.5	2 17/64	1.07	0.042	3.45	0.136
206WD	—	—	—	206WG	206WDG	—	67.5	2 21/32	1.65	0.065	4.83	0.190
207WD	—	—	—	207WG	207WDG	—	78.2	3 5/64	1.65	0.065	4.83	0.190
208WD	208WDD	—	—	208WG	208WDG	208WDDG	86.5	3 13/32	1.65	0.065	4.83	0.190
209WD	209WDD	—	—	209WG	209WDG	—	91.3	3 19/32	1.65	0.065	4.83	0.190
210WD	210WDD	—	—	210WG	210WDG[2]	—	96.4	3 51/64	2.41	0.095	5.59	0.220
211WD	211WDD	—	—	211WG[3]	211WDG	—	106.4	4 3/16	2.41	0.095	5.59	0.220
212WD	212WDD	—	—	212WG	212WDG	212WDDG	116.3	4 37/64	2.41	0.095	5.59	0.220
213WD	213WDD	213WNP	213WNPP	213WG	213WDG	213WDDG	129.4	5 3/32	2.77	0.109	6.73	0.265
214WD	214WDD	—	—	214WG	214WDG	—	134.5	5 19/64	2.77	0.109	6.73	0.265
215WD	215WDD	215WNP	215WNPP	215WG	215WDG	215WDDG	139.7	5 1/2	2.77	0.109	6.73	0.265
216WD	216WDD	—	—	216WG	216WDG	—	149.6	5 57/64	2.77	0.109	7.54	0.297
217WD	217WDD	—	—	217WG	217WDG	—	159.5	6 9/32	2.77	0.109	7.54	0.297
218WD	218WDD	218WNP	—	218WG	—	—	169.5	6 43/64	2.77	0.109	7.54	0.297
219WD	219WDD	—	—	—	—	—	—	—	—	—	—	—
220WD	220WDD	—	—	220WG	—	—	192.9	7 19/32	3.05	0.12	8.61	0.339
221WD	—	—	—	—	—	—	—	—	—	—	—	—
222WD	—	—	—	—	—	—	—	—	—	—	—	—
224WD[4]	—	—	—	—	—	—	—	—	—	—	—	—

[1] The snap ring is normally packaged separately in the box with the bearing.
[2] Also available as a GWD-type filling slot opposite the shield and snap ring.
[3] Also available as 211GW with filling slot on same side as snap ring.
[4] Width is 1.6535" for the 224WD bearing.

LIGHT 200 SERIES EXTRA WIDTH INNER RING

- Sizes available in rubber seal (P) and Mechani-Seal (L) design.
- Extra width inner ring provides greater shaft support.
- P seal version uses a Buna N rubber contact seal.
- L seal employs a frictionless metallic member to form a labyrinth.
- Used extensively in high-speed pneumatic tools, small pumps, electric motors, domestic appliances, etc.
- Electric motor quality for applications where quietness is a requirement.

DIMENSIONS – TOLERANCES

Bearing Number		Bore d				Outside Diameter D				Width B_1		Inner Ring Offset		Ring Widths 0.00, -.12 mm +0.000", - .005"				Fillet Radius(1)		Wt.		Static Load Rating C_o		Extended Dynamic Load Rating C_E(1)	
				tolerance +0.000 mm +0.0000" to minus				tolerance +0.000 mm +0.0000" to minus						Inner B		Outer C									
one seal L	one seal and shield LD	mm	in.	mm	in.	mm	in.	mm	in.	mm	in.	mm	in.	mm	in.	mm	in.	mm	in.	kg	lbs.	N	lbs.	N	lbs.
200KL	200KLD	10	0.3937	0.008	0.0003	30	1.1811	0.009	0.00035	12.70	0.500	0.51	0.020	12.19	0.480	8.99	0.354	0.6	0.024	0.036	0.08	2650	585	6550	1530
201KL	201KLD	12	0.4724	0.008	0.0003	32	1.2598	0.011	0.00045	12.70	0.500	0.51	0.020	12.19	0.480	10.01	0.394	0.6	0.024	0.041	0.09	3000	680	7500	1730
—	201KLD2	13	0.5118	0.008	0.0003	32	1.2598	0.011	0.00045	12.70	0.500	0.51	0.020	12.19	0.480	10.01	0.394	0.6	0.024	0.041	0.09	3000	680	7500	1730
201KL3	—	11.07	0.4358	0.008	0.0003	32	1.2598	0.011	0.00045	12.70	0.500	0.51	0.020	12.19	0.480	10.01	0.394	0.6	0.024	0.041	0.09	3000	680	7500	1730
202KL4	202KLD4	14	0.5512	0.008	0.0003	35	1.3780	0.011	0.00045	12.70	0.500	0.51	0.020	12.19	0.480	11.00	0.433	0.6	0.024	0.045	0.10	3690	830	8650	1930
202KL	202KLD	15	0.5906	0.008	0.0003	35	1.3780	0.011	0.00045	12.70	0.500	0.51	0.020	12.19	0.480	11.00	0.433	0.6	0.024	0.045	0.10	3450	830	8650	1930
202KL3	202KLD3	16	0.6299	0.008	0.0003	35	1.3780	0.011	0.00045	12.70	0.500	0.51	0.020	12.19	0.480	11.00	0.433	0.6	0.024	0.045	0.10	3450	830	8650	1930
203KL	203KLD	17	0.6693	0.008	0.0003	40	1.5748	0.011	0.00045	14.30	0.563	0.64	0.025	13.67	0.538	11.99	0.472	0.6	0.024	0.073	0.16	4700	1060	10800	2450
204KL	204KLD	20	0.7874	0.010	0.0004	47	1.8504	0.011	0.00045	15.88	0.625	0.64	0.025	15.24	0.600	14.00	0.551	1.0	0.039	0.113	0.25	6200	1460	14300	3200
205KL	205KLD	25	0.9843	0.010	0.0004	52	2.0472	0.013	0.0005	15.88	0.625	0.64	0.025	15.24	0.600	15.01	0.591	1.0	0.039	0.132	0.29	7800	1760	16000	3600
206KL	206KLD	30	1.1811	0.010	0.0004	62	2.4409	0.013	0.0005	20.00	0.787	0.99	0.039	19.00	0.748	16.00	0.630	1.0	0.039	0.231	0.51	10000	2550	22200	5000
207KL	207KLD	35	1.3780	0.012	0.00045	72	2.8346	0.013	0.0005	21.00	0.827	0.99	0.039	20.00	0.787	17.00	0.669	1.0	0.039	0.322	0.71	13700	3450	29000	6550
209KL	209KLD	45	1.7717	0.012	0.00045	85	3.3465	0.015	0.0006	26.00	1.024	—	—	26.00	1.024	19.00	0.748	1.0	0.039	0.508	1.12	17600	4550	37000	8300
211KL	211KLD	55	2.1654	0.015	0.0006	100	3.9370	0.015	0.0006	27.00	1.063	—	—	27.00	1.063	21.01	0.827	1.5	0.059	0.748	1.65	29100	6550	49000	11000

(1) Based on 10^6 revolutions of calculated fatigue life.

DIMENSIONS – TOLERANCES

Bearing Number		Bore d				Outside Diameter D				Ring Widths 0.00, -.12 mm +0.000", -.005"				Fillet Radius(1)		Wt.		Static Load Rating C_o		Extended Dynamic Load Rating C_E(5)	
				tolerance +0.000 mm +0.0000" to minus				tolerance +0.000 mm +0.0000" to minus		Inner B_2		Outer C									
two seals LL	two seals NPP	mm	in.	mm	in.	mm	in.	mm	in.	mm	in.	mm	in.	mm	in.	kg	lbs.	N	lbs.	N	lbs.
200KLL2	200KRR3(4)	10	0.3937	0.008	0.0003	30	1.1811	0.009	0.00035	16.40	0.646	8.99	0.354	0.6	0.024	0.036	0.08	2650	585	6800	1530
201KLL2	—	12	0.4724	0.008	0.0003	32	1.2598	0.011	0.00045	15.40	0.606	10.01	0.394	0.6	0.024	0.041	0.09	3000	680	7500	1700
201KLL3	—	13	0.5118	0.008	0.0003	32	1.2598	0.011	0.00045	15.40	0.606	10.01	0.394	0.6	0.024	0.041	0.09	3000	680	7500	1700
202KLL2	—	15	0.5906	0.008	0.0003	35	1.3780	0.011	0.00045	14.40	0.567	11.00	0.433	0.6	0.024	0.045	0.10	3690	830	8650	1930
202KLL3	202NPP11	16	0.6299	0.008	0.0003	35	1.3780	0.011	0.00045	14.40	0.567	11.00	0.433	0.6	0.024	0.045	0.10	3690	830	8650	1930
203KLL2(2)	203NPP8	17	0.6693	0.008	0.0003	40	1.5748	0.011	0.00045	16.60	0.654	11.99	0.472	0.6	0.024	0.073	0.16	4700	1060	10800	2450
204KLL2	204NPP7	20	0.7874	0.010	0.0004	47	1.8504	0.011	0.00045	17.75	0.699	14.00	0.551	1.0	0.039	0.113	0.25	6200	1460	14300	3200
205KLL2(3)	205NPP2	25	0.9843	0.010	0.0004	52	2.0472	0.013	0.0005	16.75	0.659	15.01	0.591	1.0	0.039	0.132	0.29	7800	1760	16000	3600
206KLL	206NPP2	30	1.1811	0.010	0.0004	62	2.4409	0.013	0.0005	24.00	0.945	16.00	0.630	1.0	0.039	0.231	0.51	11300	2550	22200	5000
207KLL	—	35	1.3780	0.012	0.00045	72	2.8346	0.013	0.0005	25.00	0.984	17.00	0.669	1.0	0.039	0.322	0.71	15300	3450	29000	6550
208KLL	—	40	1.5748	0.012	0.00045	80	3.1496	0.013	0.0005	30.18	1.188	18.01	0.709	1.0	0.039	0.463	1.02	20200	4550	36000	8150
209KLL	—	45	1.7717	0.012	0.00045	85	3.3465	0.015	0.0006	30.00	1.181	19.00	0.748	1.0	0.039	0.508	1.12	20200	4550	37000	8300

(1) Maximum shaft or housing fillet radius that bearing corners will clear.
(2) Also available as 203KLL with 18.24 mm (.718") inner ring width.
(3) Also available as 205KLL with 20.64 mm (.812") inner ring width.
(4) Equipped with R-Seal.
(5) Based on 10^6 revolutions of calculated fatigue life.

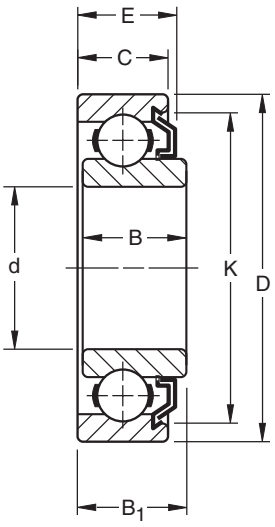

One Mechani-Seal
L

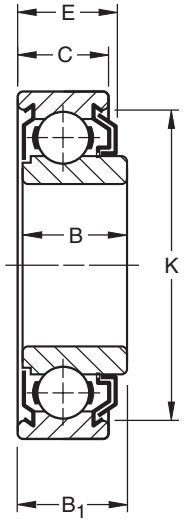

One Shield and
Mechani-Seal
LD

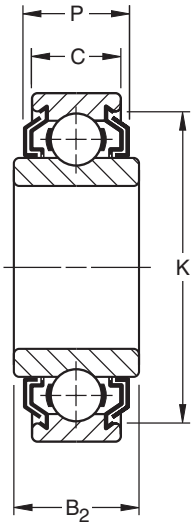

Two Mechani-Seals
LL

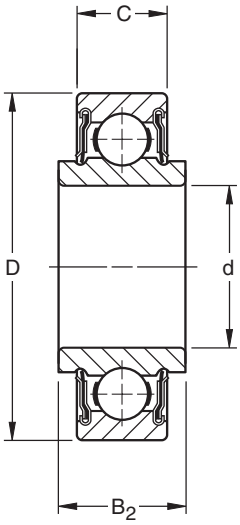

Two Rubber Seals
NPP[2]

MECHANI-SEAL SNAP RING COMBINATIONS

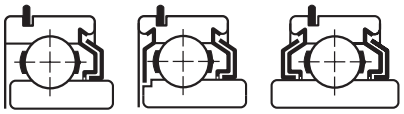

LG LDG LLG

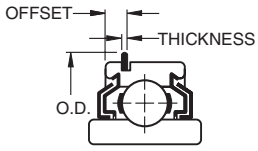

(Seal Projection) (L, LD, LL Types Only)						One Mechani-Seal	One Mechani-Seal and Shield	Two Mechani-Seals	Snap Ring[1]					
Width E		P		O.D. K		LG	LDG	LLG	O.D.		Thickness		Offset	
mm	in.	mm	in.	mm	in.				mm	in.	mm	in.	mm	in.
12.22	0.481	15.57	0.613	25.4	1	—	—	200KLLG2	34.5	1 23/64	1.07	0.042	3.05	0.120
12.19	0.480	14.40	0.567	27.0	1 1/16	—	—	201KLLG2	36.5	1 7/16	1.07	0.042	3.05	0.120
12.19	0.480	14.40	0.567	27.0	1 1/16	—	201KLDG3	—	36.5	1 7/16	1.07	0.042	3.05	0.120
12.37	0.487	13.79	0.543	30.2	1 3/16	—	202KLDG	202KLLG2	39.3	1 35/64	1.07	0.042	3.05	0.120
12.37	0.487	13.79	0.543	30.2	1 3/16	—	—	202KLLG3	39.3	1 35/64	1.07	0.042	3.05	0.120
14.00	0.551	16.00	0.630	34.9	1 3/8	203KLG	—	203KLLG2	44.4	1 3/4	1.07	0.042	3.05	0.120
15.57	0.613	17.14	0.675	40.1	1 37/64	204KLG2	—	204KLLG2	52.4	2 1/16	1.07	0.042	3.45	0.136
15.57	0.613	16.13	0.635	45.6	1 51/64	205KLG2	—	205KLLG2	57.5	2 17/64	1.07	0.042	3.45	0.136
19.48	0.767	22.99	0.905	54.4	2 9/64	—	—	206KLLG	67.5	2 21/32	1.65	0.065	4.83	0.190
20.50	0.807	23.98	0.944	62.7	2 15/32	—	—	207KLLG	78.2	3 5/64	1.65	0.065	4.83	0.190
23.32	0.918	28.63	1.127	69.8	2 3/4	—	—	—	86.5	3 13/32	1.65	0.065	4.83	0.190
24.23	0.954	29.46	1.160	75.4	2 31/32	—	—	209KLLG	91.3	3 19/32	1.65	0.065	4.83	0.190

[1] The snap ring is normally packaged separately in the box with the bearing.
NOTE: "N" prefix indicates a non-removable seal.

LIGHT 200 SERIES FELT SEAL TYPE

- Permits certain design economies, but cannot be assumed to be suitable for all conditions of service.
- In many cases, they are supplemented by adjacent parts in the application for adequate bearing protection in small equipment such as fractional horsepower motors, electric vacuum cleaners, small gear units, electric and pneumatic tools, etc.
- Suggested for effective grease retention and exclusion of foreign matter.
- Electric motor quality for applications where quietness is a requirement.

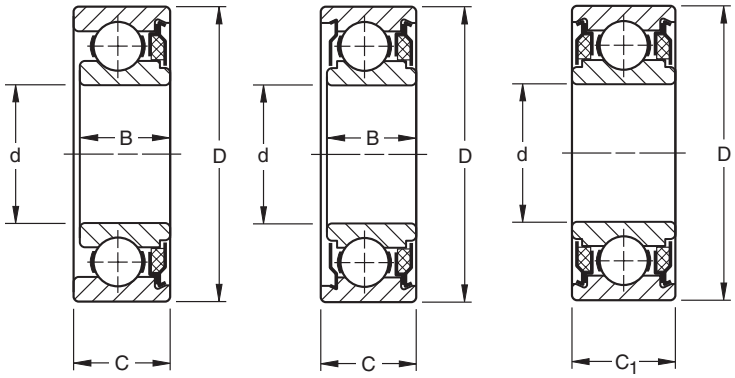

One Seal
T

One Seal and Shield
TD

Two Seals
TT

DIMENSIONS – TOLERANCES

Bearing Number one seals T	Bearing Number one seal and shield TD	Bore d tolerance +0.000 mm +0.0000" to minus				Outside Diameter D tolerance +0.000 mm +0.0000" to minus				Ring Widths +0.00 mm, -0.12 mm 0.000, -0.005"				Inner Ring Offset		Fillet Radius(1)		Wt.		Static Load Rating C_o		Extended Dynamic Load Rating C_E(3)	
		mm	in.	mm	in.	mm	in.	mm	in.	mm	in.	mm	in.	mm	in.	mm	in.	kg	lbs.	N	lbs.	N	lbs.
200KT	200KTD	10	0.3937	0.008	0.0003	30	1.1811	0.009	0.00035	12.19	0.480	12.70	0.500	0.51	0.020	0.6	0.024	0.045	0.10	2600	585	6790	1530
—	200KTD2	12	0.4724	0.008	0.0003	30	1.1811	0.009	0.00035	12.19	0.480	12.70	0.500	0.51	0.020	0.6	0.024	0.045	0.10	2600	585	6790	1530
201KT	201KTD	12	0.4724	0.008	0.0003	32	1.2598	0.011	0.00045	12.19	0.480	12.70	0.500	0.51	0.020	0.6	0.024	0.045	0.10	3000	680	7680	1730
201KT2	201KTD2	13	0.5118	0.008	0.0003	32	1.2598	0.011	0.00045	12.19	0.480	12.70	0.500	0.51	0.020	0.6	0.024	0.045	0.10	3000	680	7680	1730
202KT	202KTD	15	0.5906	0.008	0.0003	35	1.3780	0.011	0.00045	12.19	0.480	12.70	0.500	0.51	0.020	0.6	0.024	0.050	0.11	3600	830	8650	1930
202KT3(2)	202KTD3(2)	16	0.6299	0.008	0.0003	35	1.3780	0.011	0.00045	12.19	0.480	12.70	0.500	0.51	0.020	0.6	0.024	0.050	0.11	3600	830	8650	1930
203KT	203KTD	17	0.6693	0.008	0.0003	40	1.5748	0.011	0.00045	13.67	0.538	14.30	0.563	0.64	0.025	0.6	0.024	0.077	0.17	4700	1060	10900	2450
204KT	204KTD	20	0.7874	0.010	0.0004	47	1.8504	0.011	0.00045	15.24	0.600	15.88	0.625	0.64	0.025	1.0	0.039	0.118	0.26	6500	1460	14400	3250
205KT	205KTD	25	0.9843	0.010	0.0004	52	2.0472	0.013	0.00050	15.24	0.600	15.88	0.625	0.64	0.025	1.0	0.039	0.132	0.29	7800	1760	16000	3600
206KT	206KTD	30	1.1811	0.010	0.0004	62	2.4409	0.013	0.00050	19.00	0.748	19.99	0.788	0.99	0.039	1.0	0.039	0.245	0.54	11300	2550	22200	5000
207KT	207KTD	35	1.3780	0.012	0.00045	72	2.8346	0.013	0.00050	19.99	0.787	21.01	0.827	0.99	0.039	1.0	0.039	0.358	0.79	15300	3450	29000	6550

(1) Maximum shaft or housing fillet radius that bearing corners will clear.
(2) 202KT3 has 12.29 mm (.484") inner ring width.
(3) Based on 10^6 revolutions of calculated fatigue life.

DIMENSIONS – TOLERANCES

Bearing Number two seals TT	Bore d tolerance +0.000 mm +0.0000" to minus				Outside Diameter D tolerance +0.000 mm +0.0000" to minus				Ring Width C_1 +0.00 mm -0.12 mm +0.000 -0.005"		Fillet Radius(1)		Wt.		Static Load Rating C_o		Extended Dynamic Load Rating C_E(2)	
	mm	in.	mm	in.	mm	in.	mm	in.	mm	in.	mm	in.	kg	lbs.	N	lbs.	N	lbs.
200KTT	10	0.3937	0.008	0.0003	30	1.1811	0.009	0.00035	16.66	0.656	0.6	0.024	0.045	0.10	2600	585	6790	1530
201KTT	12	0.4724	0.008	0.0003	32	1.2598	0.011	0.00043	16.66	0.656	0.6	0.024	0.045	0.10	3000	680	7680	1730
201KTT3	13	0.5118	0.008	0.0003	32	1.2598	0.011	0.00043	16.66	0.656	0.6	0.024	0.045	0.10	3000	680	7680	1730
202KTT	15	0.5906	0.008	0.0003	35	1.3780	0.011	0.00043	16.66	0.656	0.6	0.024	0.050	0.11	3600	830	8650	1930
203KTT	17	0.6693	0.008	0.0003	40	1.5748	0.011	0.00043	18.24	0.718	0.6	0.024	0.077	0.17	4700	1060	10900	2450
204KTT	20	0.7874	0.010	0.0004	47	1.8504	0.011	0.00043	20.62	0.812	1.0	0.039	0.118	0.26	6500	1460	14400	3250
205KTT	25	0.9843	0.010	0.0004	52	2.0472	0.013	0.00051	20.62	0.812	1.0	0.039	0.132	0.29	7800	1760	16000	3600
206KTT	30	1.1811	0.010	0.0004	62	2.4409	0.013	0.00051	24.00	0.945	1.0	0.039	0.245	0.54	11300	2550	22200	5000
207KTT	35	1.3780	0.012	0.00045	72	2.8346	0.013	0.00051	25.00	0.984	1.0	0.039	0.358	0.79	15300	3450	29000	6550

(1) Maximum shaft or housing fillet radius that bearing corners will clear.
(2) Based on 10^6 revolutions of calculated fatigue life.

LIGHT, WIDE TYPE W200PP SERIES W200KLL SERIES

- Rubber seal (W200PP) and Mechani-Seal (W200KLL) types.
- Made with standard bores, standard outside diameters and a single row of balls.
- Same widths as double-row bearings of corresponding size.
- Extra width offers a larger support area for shaft and housing contact and added space for prepacked lubricant.
- Wide-type rubber seal bearings are particularly suited for use in electric motors, where they simplify housing design by eliminating auxiliary seals.
- Wide-type Mechani-Seal ball bearings are designed for applications where frictionless sealing and large grease capacity are required.
- Extremely effective grease retention and exclusion of foreign matter are assured by close running clearance between the seal members and slinger action of the outer member.

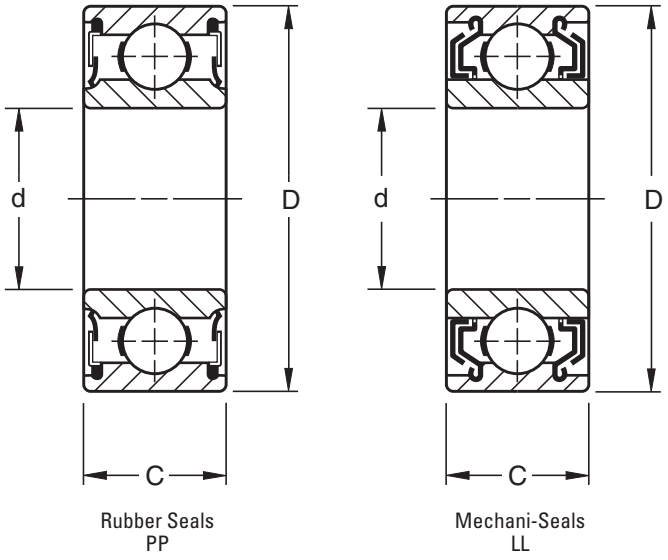

Rubber Seals PP

Mechani-Seals LL

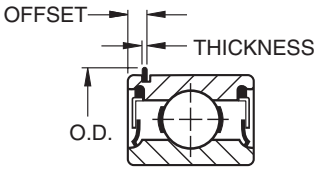

DIMENSIONS – TOLERANCES

Bearing Number		Bore d				Outside Diameter D				Width C		Fillet Radius[1]		Wt.		Static Load Rating C_o		Extended Dynamic Load C_E[4]		Snap Ring PPG[3]					
Contact Seal PP	Mechani-seal LL			tolerance +0.000 mm +0.0000" to minus				tolerance +0.000 mm +0.0000" to minus		+0.00 mm -0.12 mm +0.000" -.005"										O.D.		thickness		offset	
		mm	in.	mm	in.	mm	in.	mm	in.	mm	in.	mm	in.	kg	lbs.	N	lbs.	N	lbs.	mm	in.	mm	in.	mm	in.
W200PP	—	10	0.3937	0.008	0.0003	30	1.1811	0.009	0.00035	14.27	0.562	0.6	0.024	0.045	0.10	2650	600	6550	1500	—	—	—	—	—	—
W201PP	—	12	0.4724	0.008	0.0003	32	1.2598	0.011	0.00045	15.88	0.625	0.6	0.024	0.054	0.12	3000	695	7500	1700	—	—	—	—	—	—
W202PP	—	15	0.5906	0.008	0.0003	35	1.3780	0.011	0.00045	15.88	0.625	0.6	0.024	0.064	0.14	3450	780	8650	1930	—	—	—	—	—	—
W203PP[2]	—	17	0.6693	0.008	0.0003	40	1.5748	0.011	0.00045	17.48	0.688	0.6	0.024	0.091	0.20	4400	1000	10600	2360	44.4	$1\frac{3}{4}$	1.07	0.042	4.7	0.185
W204PP	W204KLL	20	0.7874	0.010	0.0004	47	1.8504	0.011	0.00045	20.62	0.812	1.0	0.039	0.150	0.33	6200	1400	14300	3200	—	—	—	—	—	—
W205PP[2]	W205KLL	25	0.9843	0.010	0.0004	52	2.0472	0.013	0.0005	20.62	0.812	1.0	0.039	0.177	0.39	6950	1560	15600	3450	57.5	$2\frac{17}{64}$	1.07	0.042	5.72	0.225
W206PP[2]	W206KLL	30	1.1811	0.010	0.0004	62	2.4409	0.013	0.0005	23.83	0.938	1.0	0.039	0.295	0.65	10000	2280	21600	4800	67.5	$2\frac{21}{32}$	1.65	0.065	6.15	0.242
W207PP	W207KLL	35	1.3780	0.012	0.00045	72	2.8346	0.013	0.0005	26.97	1.062	1.0	0.039	0.458	1.01	13700	3050	28500	6400	—	—	—	—	—	—
W208PP	W208KLL	40	1.5748	0.012	0.00045	80	3.1496	0.013	0.0005	30.18	1.188	1.0	0.039	0.630	1.39	17600	4000	36000	8150	—	—	—	—	—	—
W209PP	W209KLL	45	1.7717	0.012	0.00045	85	3.3465	0.015	0.0006	30.18	1.188	1.0	0.039	0.668	1.47	17600	4000	36000	8150	—	—	—	—	—	—
W210PP	—	50	1.9685	0.012	0.00045	90	3.5433	0.015	0.0006	30.18	1.188	1.0	0.039	0.767	1.69	19600	4500	39000	8800	—	—	—	—	—	—
W214PP	—	70	2.7559	0.015	0.0006	125	4.9213	0.018	0.0007	39.67	1.562	1.5	0.059	1.810	3.99	37500	8500	69500	15600	—	—	—	—	—	—

[1] Maximum shaft or housing fillet radius that bearing corners will clear.
[2] Also available with snap ring. To order, add suffix "G" to bearing number. Example: W205PPG.
[3] The snap ring is normally packaged separately in the box with the bearing.
[4] Based on 10^6 revolutions of calculated fatigue life.

MEDIUM 300K SERIES

- A heavier cross section than the 200 Series.
- Capable of carrying considerably heavier radial, thrust and combined loads for a given bore size.
- Capable of withstanding heavy shock loads. A ball bearing of heavier cross section is rarely required.
- Uses Conrad-type bearing that is well-balanced, with deep races and uninterrupted race shoulders.
- Electric motor quality where quietness is a requirement.

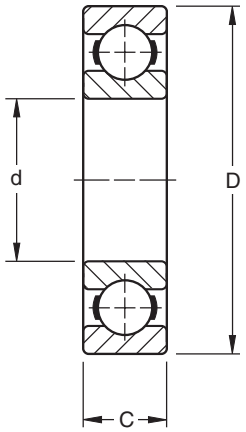

DIMENSIONS – TOLERANCES

Bearing Number	Bore d tolerance +0.000 mm +0.0000" to minus				Outside Diameter D tolerance +0.000 mm +0.0000" to minus				Width C tolerance +0.000 mm +0.0000" to minus				Fillet Radius(1)		Wt.		Static Load Rating C_o		Extended Dynamic Load Rating C_E(2)	
	mm	in.	mm	in.	mm	in.	mm	in.	mm	in.	mm	in.	mm	in.	kg	lbs.	N	lbs.	N	lbs.
300K	10	0.3937	0.008	0.0003	35	1.3780	0.011	0.00043	11	0.433	0.12	0.005	0.6	0.024	0.054	0.12	3460	780	9200	2080
301K	12	0.4724	0.008	0.0003	37	1.4567	0.011	0.00043	12	0.472	0.12	0.005	1.0	0.039	0.064	0.14	3620	815	9400	2120
302K	15	0.5906	0.008	0.0003	42	1.6535	0.011	0.00043	13	0.512	0.12	0.005	1.0	0.039	0.082	0.18	5240	1180	13300	3000
303K	17	0.6693	0.008	0.0003	47	1.8504	0.011	0.00043	14	0.551	0.12	0.005	1.0	0.039	0.109	0.24	6550	1460	15300	3450
304K	20	0.7874	0.010	0.0004	52	2.0472	0.013	0.0005	15	0.591	0.12	0.005	1.0	0.039	0.141	0.31	7800	1760	17900	4050
305K	25	0.9843	0.010	0.0004	62	2.4409	0.013	0.0005	17	0.669	0.12	0.005	1.0	0.039	0.236	0.52	12200	2750	26600	6000
306K	30	1.1811	0.010	0.0004	72	2.8346	0.013	0.0005	19	0.748	0.12	0.005	1.0	0.039	0.354	0.78	15600	3550	33900	7650
307K	35	1.3780	0.012	0.00047	80	3.1496	0.013	0.0005	21	0.827	0.12	0.005	1.5	0.059	0.472	1.04	18400	4150	37700	8500
308K	40	1.5748	0.012	0.00047	90	3.5433	0.015	0.0006	23	0.906	0.12	0.005	1.5	0.059	0.644	1.42	25900	5850	50600	11400
309K	45	1.7717	0.012	0.00047	100	3.9370	0.015	0.0006	25	0.984	0.12	0.005	1.5	0.059	0.862	1.90	31500	7100	59500	13400
310K	50	1.9685	0.012	0.00047	110	4.3307	0.015	0.0006	27	1.063	0.12	0.005	2.0	0.079	1.125	2.48	37700	8500	69300	15600
311K	55	2.1654	0.015	0.0006	120	4.7244	0.015	0.0006	29	1.142	0.15	0.006	2.0	0.079	1.424	3.14	44400	10000	81200	18300
312K	60	2.3622	0.015	0.0006	130	5.1181	0.018	0.0007	31	1.220	0.15	0.006	2.0	0.079	1.765	3.89	51500	11600	92300	20800
313K	65	2.5591	0.015	0.0006	140	5.5118	0.018	0.0007	33	1.299	0.15	0.006	2.0	0.079	2.168	4.78	59500	13400	104000	23600
314K	70	2.7559	0.015	0.0006	150	5.9055	0.025	0.0010	35	1.378	0.15	0.006	2.0	0.079	2.617	5.77	67900	15300	116000	26000
315K	75	2.9528	0.015	0.0006	160	6.2992	0.018	0.0007	37	1.457	0.15	0.006	2.0	0.079	3.175	7.00	76800	17300	128000	29000
316K	80	3.1496	0.015	0.0006	170	6.6929	0.025	0.0010	39	1.535	0.15	0.006	2.0	0.079	3.756	8.28	85700	19300	139000	31500
317K	85	3.3465	0.020	0.0008	180	7.0866	0.025	0.0010	41	1.614	0.20	0.008	2.5	0.098	5.008	11.04	95900	21600	151000	34000
318K	90	3.5433	0.020	0.0008	190	7.4803	0.030	0.0012	43	1.693	0.20	0.008	2.5	0.098	5.121	11.29	106000	24000	162000	36500
320K	100	3.9370	0.020	0.0008	215	8.4646	0.030	0.0012	47	1.850	0.20	0.008	2.5	0.098	7.085	15.62	139000	31500	195000	41500
321K	105	4.1339	0.020	0.0008	225	8.8583	0.030	0.0012	49	1.929	0.20	0.008	2.5	0.098	10.21	22.52	163000	36500	126000	48000
322K	110	4.3307	0.020	0.0008	240	9.4488	0.030	0.0012	50	1.969	0.20	0.008	2.5	0.098	12.17	26.82	166000	37500	220000	49000
326K	130	5.1181	0.020	0.0010	280	11.0236	0.035	0.0014	58	2.323	0.25	0.010	2.5	0.098	18.90	41.60	240000	54000	280000	63000
330K	150	5.9055	0.025	0.0010	320	12.5984	0.040	0.0016	65	2.559	0.25	0.010	2.5	0.098	27.10	59.70	310000	69500	335000	75000
332K	160	6.2992	0.025	0.0010	340	13.3858	0.040	0.0016	68	2.677	0.25	0.010	2.5	0.098	31.51	69.40	310000	69500	335000	75000
334K	170	6.6929	0.025	0.0010	360	14.1732	0.040	0.0016	72	2.835	0.25	0.010	2.5	0.098	36.82	81.10	355000	80000	360000	81500
336K	180	7.0866	0.025	0.0010	380	14.9606	0.040	0.0016	75	2.953	0.25	0.010	2.5	0.098	42.04	92.60	390000	88000	390000	88000
338K	190	7.4803	0.030	0.0012	400	15.7480	0.040	0.0016	78	3.071	0.30	0.012	4.0	0.16	47.6	105.0	440000	98000	425000	95000
340K	200	7.8740	0.030	0.0012	420	16.5354	0.045	0.0018	80	3.150	0.30	0.012	4.0	0.16	56.1	123.6	465000	104000	425000	95000
342K	210	8.2677	0.030	0.0012	440	17.3228	0.045	0.0018	84	3.307	0.30	0.012	4.0	0.16	58.1	128.2	570000	129000	510000	114000
344K	220	8.6614	0.030	0.0012	460	18.1102	0.045	0.0018	88	3.465	0.30	0.012	4.0	0.16	69.8	154.0	610000	137000	520000	116000
348K	240	9.4488	0.030	0.0012	500	19.6850	0.045	0.0018	95	3.740	0.30	0.012	4.0	0.16	81.1	178.9	735000	163000	600000	134000
352K	260	10.2362	0.035	0.0014	540	21.2598	0.050	0.0020	102	4.016	0.35	0.014	4.0	0.16	98.4	217.0	850000	190000	670000	150000
356K	280	11.0236	0.035	0.0014	580	22.8346	0.050	0.0020	108	4.252	0.35	0.014	4.0	0.16	142.8	315.0	780000	176000	585000	134000

(1) Maximum shaft or housing fillet radius that bearing corners will clear.
(2) Based on 10^6 revolutions of calculated fatigue life.

SHIELDS, SEALS AND SNAP RING COMBINATIONS

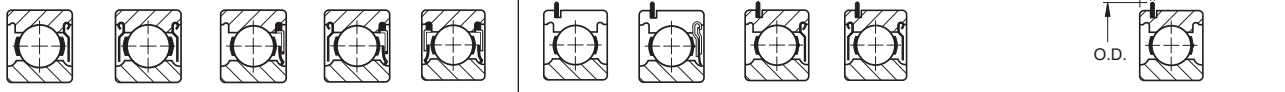

One Shield D	Two Shields DD	One Seal P	One Seal One Shield PD	Two Seals PP	Open Type G	One Shield PG	One Shield DG	Two Shields DDG	O.D.		Thickness		Offset	
									mm	in.	mm	in.	mm	in.
300KD	300KDD	300P	—	—	—	—	—	—	39.3	$1\frac{35}{64}$	1.07	0.042	3.05	0.120
301KD	301KDD	—	—	—	—	—	—	—	40.9	$1\frac{39}{64}$	1.07	0.042	3.05	0.120
302KD	302KDD	—	—	—	—	—	—	—	46.0	$1\frac{13}{16}$	1.07	0.042	3.05	0.120
303KD	303KDD	303P	—	303PP	303KG	—	—	—	52.4	$2\frac{1}{16}$	1.07	0.042	3.45	0.136
304KD	304KDD	304P	—	304PP	304KG	—	304KDG	304KDDG	57.5	$2\frac{17}{64}$	1.07	0.042	3.45	0.136
305KD	305KDD	305P	—	305PP	305KG	—	305KDG	305KDDG	67.5	$2\frac{21}{32}$	1.65	0.065	4.83	0.190
306KD	306KDD	306P	—	306PP	306KG	—	306KDG	306KDDG	78.2	$3\frac{5}{64}$	1.65	0.065	4.83	0.190
307KD	307KDD	307P	—	307PP	307KG	—	307KDG	307KDDG	86.5	$3\frac{13}{32}$	1.65	0.065	4.83	0.190
308KD	308KDD	308P	—	308PP	308KG	—	308KDG	308KDDG	96.4	$3\frac{51}{64}$	2.41	0.095	5.59	0.220
309KD	309KDD	309P	—	309PP	309KG	—	309KDG	309KDDG	106.4	$4\frac{3}{16}$	2.41	0.095	5.59	0.220
310KD	310KDD	310P	—	310PP	310KG	—	310KDG	310KDDG	116.3	$4\frac{37}{64}$	2.41	0.095	5.59	0.220
311KD	311KDD	311NP	311NPD	311NPP	311KG	311NPG	—	311KDDG	129.4	$5\frac{3}{32}$	2.77	0.109	6.73	0.265
312KD	312KDD	—	—	312NPP	312KG	—	—	312KDDG	139.7	$5\frac{1}{2}$	2.77	0.109	6.73	0.265
313KD	313KDD	—	—	—	—	—	—	313KDDG	149.6	$5\frac{57}{64}$	2.77	0.109	7.54	0.297
314KD	314KDD	—	—	—	—	—	—	—	—	——	—	—	—	
315KD	315KDD	—	—	—	—	—	—	—	—	——	—	—	—	
316KD	316KDD	—	—	—	—	—	—	—	—	——	—	—	—	
317KD	317KDD	—	—	—	—	—	—	—	—	——	—	—	—	
—	—	—	—	—	—	—	—	—	—	——	—	—	—	
320KD	320KDD	—	—	—	—	—	—	—	—	——	—	—	—	

(1) The snap ring is normally packaged separately in the box with the bearing.
Note: "N" prefix indicates a non-removable seal in NP (P) designs.

MEDIUM 300W SERIES

- A heavier cross section than the 200 Series.
- Capable of carrying considerably heavier radial, thrust and combined loads for a given bore size.
- Capable of withstanding heavy shock loads. A ball bearing of heavier cross section is rarely required.
- 300W Series bearings are dimensionally interchangeable with the 300K Series. However, bearings within the 300W Series are capable of carrying heavier radial loads, due to their larger ball complements.

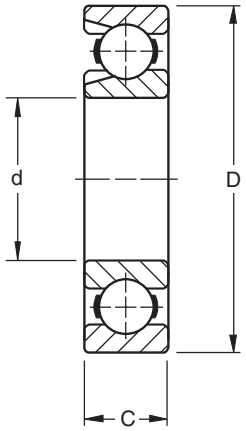

DIMENSIONS – TOLERANCES

Bearing Number	Bore d		tolerance +0.000 mm +0.0000" to minus		Outside Diameter D		tolerance +0.000 mm +0.0000" to minus		Width C		tolerance +0.000 mm +0.0000" to minus		Fillet Radius(1)		Wt.		Static Load Rating C_o		Extended Dynamic Load Rating C_E(2)	
	mm	in.	mm	in.	mm	in.	mm	in.	mm	in.	mm	in.	mm	in.	kg	lbs.	N	lbs.	N	lbs.
303W	17	0.6693	0.008	0.0003	47	1.8504	0.011	0.00045	14	0.551	0.12	0.005	1.0	0.039	0.118	0.26	9400	2120	20600	4650
304W	20	0.7874	0.010	0.0004	52	2.0472	0.013	0.0005	15	0.591	0.12	0.005	1.0	0.039	0.154	0.34	11300	2550	23900	5400
305W	25	0.9843	0.010	0.0004	62	2.4409	0.013	0.0005	17	0.669	0.12	0.005	1.0	0.039	0.259	0.57	17300	3900	33900	7650
306W	30	1.1811	0.010	0.0004	72	2.8346	0.013	0.0005	19	0.748	0.12	0.005	1.0	0.039	0.386	0.85	22600	5100	42800	9650
307W	35	1.3780	0.012	0.00047	80	3.1496	0.013	0.0005	21	0.827	0.12	0.005	1.5	0.059	0.513	1.13	29000	6550	51500	11600
308W	40	1.5748	0.012	0.00047	90	3.5433	0.015	0.0006	23	0.906	0.12	0.005	1.5	0.059	0.844	1.86	39000	8000	66000	15000
309W	45	1.7717	0.012	0.00047	100	3.9370	0.015	0.0006	25	0.984	0.12	0.005	1.5	0.059	0.934	2.06	47000	10600	78100	17600
310W	50	1.9685	0.012	0.00047	110	4.3307	0.015	0.0006	27	1.063	0.12	0.005	2.0	0.079	1.207	2.66	56000	12700	92000	20800
311W	55	2.1654	0.015	0.0006	120	4.7244	0.015	0.0006	29	1.142	0.15	0.006	2.0	0.079	1.542	3.40	66000	15000	106000	24000
312W	60	2.3622	0.015	0.0006	130	5.1181	0.018	0.0007	31	1.220	0.15	0.006	2.0	0.079	1.923	4.24	78000	17600	122000	27500
313W	65	2.5591	0.015	0.0006	140	5.5118	0.018	0.0007	33	1.299	0.15	0.006	2.0	0.079	2.413	5.32	96000	21600	144000	32500
314W	70	2.7559	0.015	0.0006	150	5.9055	0.018	0.0007	35	1.378	0.15	0.006	2.0	0.079	2.885	6.36	101000	22800	153000	34500
315W	75	2.9528	0.015	0.0006	160	6.2992	0.025	0.0010	37	1.457	0.15	0.006	2.0	0.079	3.497	7.71	127000	28500	180000	40500
316W	80	3.1496	0.015	0.0006	170	6.6929	0.025	0.0010	39	1.535	0.15	0.006	2.0	0.079	4.154	9.15	142000	32000	195000	44000
317W	85	3.3465	0.020	0.0008	180	7.0866	0.025	0.0010	41	1.614	0.20	0.008	2.5	0.098	4.872	10.74	157000	35500	211000	47500
318W	90	3.5433	0.020	0.0008	190	7.4803	0.030	0.0012	43	1.693	0.20	0.008	2.5	0.098	5.625	12.39	173000	39000	226000	51000
319W	95	3.7402	0.020	0.0008	200	7.8740	0.030	0.0012	45	1.772	0.20	0.008	2.5	0.098	6.514	14.36	191000	43000	239000	54000
320W	100	3.9370	0.020	0.0008	215	8.4646	0.030	0.0012	47	1.850	0.20	0.008	2.5	0.098	7.992	17.62	226000	51000	270000	61000
321W	105	4.1339	0.020	0.0008	225	8.8583	0.030	0.0012	49	1.929	0.20	0.008	2.5	0.098	9.117	20.10	244000	55000	284000	64000
322W	110	4.3307	0.020	0.0008	240	9.4488	0.030	0.0012	50	1.968	0.20	0.008	2.5	0.098	10.81	23.84	266000	60000	302000	68000
324W	120	4.7244	0.020	0.0008	260	10.2362	0.035	0.0014	55	2.165	0.20	0.008	2.5	0.098	15.01	33.10	284000	64000	319000	72000
326W	130	5.1181	0.025	0.0010	280	11.0236	0.035	0.0014	58	2.323	0.25	0.010	2.5	0.098	19.56	43.12	326000	73500	355000	80000
328W	140	5.5118	0.025	0.0010	300	11.8110	0.035	0.0014	62	2.441	0.25	0.010	2.5	0.098	23.06	50.80	410000	91500	400000	90000
330W	150	5.9055	0.025	0.0010	320	12.5984	0.040	0.0016	65	2.559	0.25	0.010	2.5	0.098	26.81	59.10	422000	95000	422000	95000
336W	180	7.0866	0.025	0.0010	380	14.9606	0.040	0.0016	79	3.110	0.25	0.010	2.5	0.098	47.66	105.10	600000	132000	524000	118000
338W	190	7.4803	0.030	0.0012	400	15.7480	0.040	0.0016	78	3.071	0.30	0.012	4.0	0.160	49.21	108.40	720000	160000	580000	129000
340W	200	7.8740	0.030	0.0012	420	16.5354	0.045	0.0018	80	3.150	0.30	0.012	4.0	0.160	57.48	126.60	730000	163000	570000	127000
342W	210	8.2677	0.030	0.0012	440	17.3228	0.045	0.0018	84	3.307	0.30	0.012	4.0	0.160	60.70	133.70	935000	208000	720000	160000
344W	220	8.6614	0.030	0.0012	460	18.1102	0.045	0.0018	88	3.465	0.30	0.012	4.0	0.160	72.10	158.80	880000	196000	700000	150000
348W	240	9.4488	0.030	0.0012	500	19.6850	0.045	0.0018	95	3.740	0.30	0.012	4.0	0.160	84.99	187.20	1200000	260000	850000	186000
352W	260	10.2362	0.035	0.0014	540	21.2598	0.050	0.0020	102	4.016	0.35	0.014	4.0	0.160	103.38	227.70	1400000	310000	950000	208000
356W	280	11.0236	0.035	0.0014	580	22.8346	0.050	0.0020	108	4.252	0.35	0.014	4.0	0.160	146.78	323.30	1350000	300000	855000	190000

(1) Maximum shaft or housing fillet radius that bearing corners will clear.

(2) Based on 10^6 revolutions of calculated fatigue life.

For applications where thrust load exceeds 60% Radial Load, consult your Timken representative.

Listed in the table below are Timken maximum capacity type bearings (300W Series) with shields, seals and snap ring combinations.

The bearing number suffixes denote the following:

- **WD** - filling slot opposite single shield
- **WG** - filling slot opposite snap ring
- **WDD** - two shields
- **WDG** - filling slot and snap ring opposite shield

SHIELDS, SEALS AND SNAP RING COMBINATIONS

Shields and Seals

Snap Ring (Wireloc)(1)

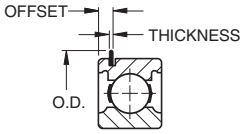

One Shield D	Two Shields DD	Open Type G	Open Shield DG	Two Shields DDG	O.D.		Thickness		Offset	
					mm	in.	mm	in.	mm	in.
—	—	—	—	—	—	—	—	—	—	—
—	—	304WG	—	—	57.5	2 17/64	1.07	0.042	3.45	0.136
305WD	—	305WG	—	—	67.5	2 21/32	1.65	0.065	4.83	0.190
306WD	306WDD	306WG	306WDG	—	78.2	3 5/64	1.65	0.065	4.83	0.190
307WD	307WDD	307WG	307WDG	—	86.5	3 13/32	1.65	0.065	4.83	0.190
308WD	308WDD	308WG(2)	308WDG	—	96.4	3 51/64	2.41	0.095	5.59	0.220
309WD	309WDD	309WG	309WDG	—	106.4	4 3/16	2.41	0.095	5.59	0.220
310WD	310WDD	310WG	310WDG	310WDDG	116.3	4 37/64	2.41	0.095	5.59	0.220
311WD	311WDD	311WG	311WDG	—	129.4	5 3/32	2.77	0.109	6.73	0.265
312WD	312WDD	312WG(3)	312WDG	312WDDG	139.7	5 1/2	2.77	0.109	6.73	0.265
313WD	313WDD	313WG	313WDG	313WDDG	149.6	5 57/64	2.77	0.109	7.54	0.297
314WD	314WDD	—	—	—	—	—	—	—	—	—
315WD	315WDD	—	—	—	—	—	—	—	—	—
316WD	316WDD	316WG	—	—	182.6	7 3/16	3.05	0.120	8.61	0.339
317WD	317WDD	—	—	—	—	—	—	—	—	—
—	—	—	—	—	—	—	—	—	—	—
—	—	—	—	—	—	—	—	—	—	—
320WD	—	—	—	—	—	—	—	—	—	—
—	—	—	—	—	—	—	—	—	—	—
—	—	322WG	—	—	252.8	9 61/64	3.05	0.120	8.61	0.339

(1) The snap ring is normally packaged separately in the box with the bearing.
(2) Also available as a GW-Type filling slot and snap ring on same side. Also available 308GW2 with 20 mm width.
(3) Also available as 312WG-3 with filling slot on same side as snap ring.

MEDIUM, WIDE TYPE W300PP SERIES AND W300KLL SERIES

- The W300PP (rubber seal) Series and the W300KLL (Mechani-Seal) Series have the same bores and outside diameters as standard 300 Series ball bearings.
- Widths are equal to 5300 Series double-row ball bearings.
- Added width provides extra support on shafts and in housings and eliminates the need for locknuts and lockwashers on applications such as electric motors.
- Prepacked with the right amount of long-life, factory-filtered grease.
- These series incorporate the same advantages as the standard width Mechani-Seal and rubber seal bearings.
- Electric motor quality for applications where quietness is a requirement.

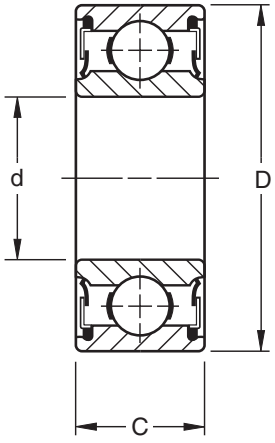

Rubber Seals
PP

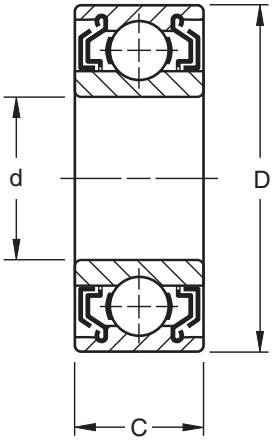

Mechani-Seals
LL

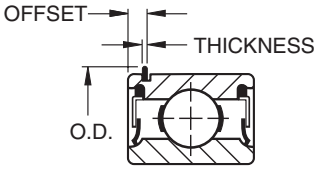

D

DIMENSIONS – TOLERANCES

Bearing Number		Bore d				Outside Diameter D				Width C		Fillet Radius[1]		Wt.		Static Load Rating C_o		Extended Dynamic Load C_E[4]		Snap Ring PPG					
Contact Seal PP	Mechani-Seal LL	tolerance +0.000 mm +0.0000" to minus				tolerance +0.000 mm +0.0000" to minus				+0.00 mm -.12 mm +0.000" -.005"										O.D.		Thickness		Offset	
		mm	in.	mm	in.	mm	in.	mm	in.	mm	in.	mm	in.	kg	lbs.	N	lbs.	N	lbs.	mm	in.	mm	in.	mm	in.
W304PP	—	20	0.7874	0.010	0.0004	52	2.0472	0.013	0.0005	22.22	0.875	1.0	0.039	0.213	0.47	7800	1760	17900	4050	—	—	—	—	—	—
W305PP[2]	—	25	0.9843	0.010	0.0004	62	2.4409	0.013	0.0005	25.40	1.000	1.0	0.039	0.354	0.78	12200	2750	26600	6000	67.5	$2\,21/35$	1.65	0.065	4.82	0.190
W306PP	—	30	1.1811	0.010	0.0004	72	2.8346	0.013	0.0005	30.18	1.188	1.0	0.039	0.558	1.23	15600	3550	33900	7650	—	—	—	—	—	—
W307PP	W307KLL	35	1.3780	0.012	0.00047	80	3.1496	0.013	0.0005	34.92	1.375	1.5	0.059	0.780	1.72	18400	4150	37700	8500	—	—	—	—	—	—
W308PP[2]	W308KLL[2]	40	1.5748	0.012	0.00047	90	3.5433	0.015	0.0006	36.53	1.438	1.5	0.059	1.021	2.25	25900	5850	50600	11400	96.4	$3\,51/64$	2.41	0.095	5.59	0.220
W309PP	W309KLL	45	1.7717	0.012	0.00047	100	3.9370	0.015	0.0006	39.67	1.562	1.5	0.059	1.370	3.02	31500	7100	59000	13400	—	—	—	—	—	—
W310PP	—	50	1.9685	0.012	0.00047	110	4.3307	0.015	0.0006	44.45	1.750	2.0	0.079	1.828	4.03	37700	8500	69000	15600	—	—	—	—	—	—
W311PP[2]	W311KLL	55	2.1654	0.015	0.0006	120	4.7244	0.015	0.0006	49.23	1.938[3]	2.0	0.079	2.386	5.26	44400	10000	81000	18300	129.4	$5\,3/32$	2.77	0.109	0.73	0.265
W312PP[2]	W312KLL	60	2.3622	0.015	0.0006	130	5.1181	0.018	0.0007	53.98	2.125[3]	2.0	0.079	3.053	6.73	51500	11600	92000	20800	139.7	$5\,1/2$	2.77	0.109	0.73	0.265
W313PP	—	65	2.5591	0.015	0.0006	140	5.5118	0.018	0.0007	58.72	2.312[3]	2.0	0.079	3.883	8.56	59500	13400	104000	23600	—	—	—	—	—	—
W314PP	—	70	2.7559	0.015	0.0006	150	5.9055	0.018	0.0007	63.50	2.500[3]	2.0	0.079	4.731	10.43	67000	15300	116000	26000	—	—	—	—	—	—
W315PP	—	75	2.9528	0.015	0.0006	160	6.2992	0.025	0.0010	68.28	2.688[3]	2.0	0.079	5.811	12.81	76000	17300	128000	29000	—	—	—	—	—	—

[1] Maximum shaft or housing fillet radius that bearing corners will clear.
[2] Also available with snap ring. To order, add suffix "G" to bearing number. Example: W305PPG. The snap ring is normally packaged separately in the box with the bearing.
[3] Width tolerance is .00 mm to -.15 mm (.000" to -.006").
[4] Based on 10^6 revolutions of calculated fatigue life.

TRI-PLY SEAL SERIES NON-RELUBRICATABLE TYPE CYLINDRICAL O.D.

- Designed for environments where severe contamination is present, such as agricultural tillage equipment.
- One-piece Tri-Ply seals:
  - Incorporate a highly effective design molded to an exterior shroud cap.
  - Provide exceptionally effective protection against loss of lubricant and entrance of wet or abrasive contaminants.
- Seven-piece Tri-Ply construction:
  - Standard on certain sizes.
  - Shroud cap nests closely with the outside seal.
  - Helps protect the rubber seal members from fiber wrap warpage and abrasion.
  - Balanced design, identified by deep races, large balls and extra-wide or heavy, shock-resistant inner and outer rings.
- Use of Tri-Ply Seal bearings simplifies housing designs and their extra inner ring width provides greater support on the shaft.
- For speeds in excess of 500 RPM, consult your Timken representative.

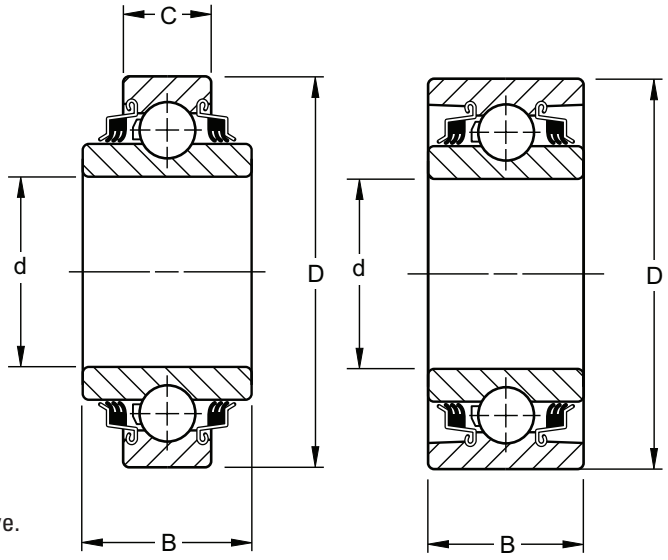

Type 1 Type 2

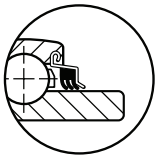

Figure 1

Figure 2

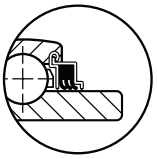

Figure 3

ROUND BORE

Bearing Number	Type-Fig.	Bore d		tolerance +0.000 mm +0.0000" to minus		Outside Diameter D		tolerance +0.000 mm +0.0000" to minus		Ring Widths 0.00, -.12 mm +0.000", -0.005" B Inner		C Outer		Balls No.	Balls Size	Wt.		Static Load Rating C_o		Extended Dynamic Load Rating C_E[2]	
		mm	in.	mm	in.	mm	in.	mm	in.	mm	in.	mm	in.	mm	in.	kg	lbs.	N	lbs.	N	lbs.
W208PP10	1-1	38.113	1.5005	0.013	0.0005	80	3.1496	0.013	0.0005	42.87	1.688	21.00	0.827	9	1/2	0.681	1.50	19900	4500	36800	8300
W210PP8	2-	38.860	1.5300	0.250	0.0100	90	3.5433	0.015	0.0006	30.18	1.188	30.18	1.188	10	1/2	0.894	1.97	23000	5200	39900	9000
W210PP2	2-	49.230	1.9380	0.013	0.0005	90	3.5433	0.015	0.0006	30.18	1.188	30.18	1.188	10	1/2	0.767	1.69	23000	5200	39900	9000
W211PP2	2-2	55.580	2.1880	0.015	0.0006	100	3.9370	0.015	0.0006	33.34[1]	1.312	33.34	1.312	10	9/16	1.056	2.33	29000	6550	48800	11000
W214PP2	2-	70.000	2.7559	0.015	0.0006	125	4.9213	0.020	0.0008	39.69[1]	1.562	39.69	1.562	10	1 1/16	1.901	4.19	43500	9800	71000	16000
W315PP2	2-	76.342	3.0056	0.015	0.0006	160	6.2992	0.025	0.0010	68.26[1]	2.688	68.26	2.688	8	1 1/16	5.956	13.13	76800	17300	128000	29000

(1) Inner and outer width tolerance is .00 mm to -.15 mm (.000" to .006").
(2) Based on 10^6 revolutions of calculated fatigue life.

SQUARE BORE

Bearing Number	Type-Fig.	Shaft Size d		Outside Diameter D		tolerance +0.000 mm +0.0000" to minus		Ring Widths 0.00, -.12 mm +0.000", -0.005" B Inner		C Outer		Balls No.	Balls Size	Wt.		Static Load Rating C_o		Extended Dynamic Load Rating C_E[2]	
		mm	in.	mm	in.	mm	in.	mm	in.	mm	in.	mm	in.	kg	lbs.	N	lbs.	N	lbs.
W208PP6	1–1	25.4	1	80	3.1496	0.013	0.0005	36.51	1.438	18	0.709	9	1/2	0.73	1.62	19900	4500	36800	8300
W208PP5	1–1	28.6	1 1/8	80	3.1496	0.013	0.0005	36.51	1.438	18	0.709	9	1/2	0.68	1.50	19900	4500	36800	8300
W208PP8	1–1	28.6	1 1/8	80	3.1496	0.013	0.0005	36.51	1.438	30.18	1.188	9	1/2	0.75	1.66	19900	4500	36800	8300
W211PP3	2–2	38.1	1 1/2	100	3.9370	0.015	0.0006	33.34[1]	1.312	33.34	1.312	10	9/16	1.27	2.79	29000	6550	48800	11000
W211PP5	1–2	38.1	1 1/2	101.6	4.0000	0.015	0.0006	44.45[1]	1.750	36.52	1.438	10	7/16	1.58	3.48	29000	6550	48800	11000

(1) Inner and outer width tolerance is .00 mm to -.15 mm (.000" to .006").
(2) Based on 10^6 revolutions of calculated fatigue life.

TRI-PLY SEAL SERIES NON-RELUBRICATABLE TYPE SPHERICAL O.D.

- Similar in design and features to bearings shown on D27, except for a spherical O.D.

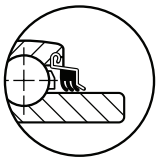

Figure 1

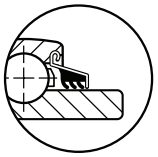

Figure 2

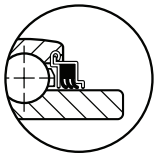

Figure 3

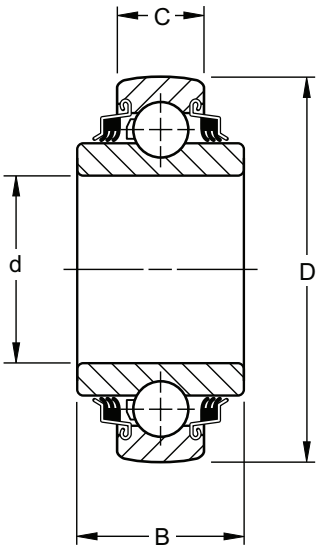

Type 1

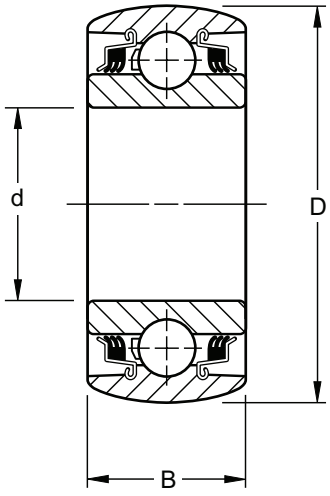

Type 2

ROUND BORE

Bearing Number	Type-Fig.	Bore d		tolerance +0.000 mm +0.0000" to minus		Outside Diameter D		tolerance +0.000 mm +0.0000" to minus		Ring Widths +0.00, -.12 mm +0.000", -0.005" B Inner		C Outer		Balls No.	Balls Size	Stamping Size	Wt.		Static Load Rating C_o		Extended Dynamic Load Rating C_E[2]	
		mm	in.	mm	in.	mm	in.	mm	in.	mm	in.	mm	in.	mm	in.			kg	lbs.	N	lbs.	N	lbs.
W208PPB7	1–1	30.170	1.1880	0.013	0.0005	80	3.150	0.013	0.0005	30.18	1.188	18.00	0.709	9	1/2	80MS	0.640	1.41	19900	4500	36800	8300
W208PPB2	1–	38.113	1.5005	0.013	0.0005	80	3.150	0.013	0.0005	42.96	1.688	18.00	0.709	9	1/2	80MS	0.721	1.59	19900	4500	36800	8300
W208PPB23	1–1	38.113	1.5005	0.013	0.0005	80	3.150	0.013	0.0005	42.96	1.688	30.18	1.188	9	15/32	80MS	0.681	1.50	15600	3550	32000	7200
W209PPB2	2–2	45.000	1.7717	0.013	0.0005	85	3.346	0.015	0.0006	30.18	1.188	30.18	1.188	9	1/2	85MS	0.653	1.44	20200	4550	36800	8300
W209PPB4	2–2	39.000	1.5350	0.250	0.0100	85	3.346	0.015	0.0006	30.18	1.188	30.18	1.188	9	1/2	85MS	0.748	1.65	20200	4550	36800	8300
W210PPB2	2–	49.230	1.9380	0.013	0.0005	90	3.543	0.015	0.0006	30.18	1.188	30.18	1.188	10	1/2	90MS	0.708	1.56	23000	5200	39900	9000
W210PPB5	2–	45.340	1.7850	0.250	0.0100	90	3.543	0.015	0.0006	30.18	1.188	30.18	1.188	10	1/2	90MS	0.794	1.75	23000	5200	39900	9000
W211PPB2	2–2	55.580	2.1880	0.015	0.0006	100	3.937	0.015	0.0006	33.34[1]	1.312	33.34	1.312	10	9/16	100MS	0.966	3.63	29000	6550	48800	11000
W214PPB2	2–	70.000	2.7559	0.015	0.0006	125	4.921	0.02	0.0008	39.69[1]	1.562	39.69	1.562	10	11/16	—	1.796	3.96	43500	9800	71000	16000
W214PPB9	1–	70.260	2.7660	0.025	0.0010	125	4.921	0.02	0.0008	44.45[1]	1.750	28.00	1.102	10	11/16	—	1.796	3.96	43500	9800	71000	16000

[1] Inner and outer width tolerance is .00 mm to -.15 mm (.000" to -.006").
[2] Based on 10^6 revolutions of calculated fatigue life.

SQUARE BORE

Bearing Number	Type-Fig.	Shaft Size	to minus	Outside Diameter D		tolerance +0.000 mm +0.0000" to minus		Ring Widths +0.00, -.12 mm +0.000", -0.005" B Inner		C Outer		Balls No.	Balls Size	Stamping Size	Wt.		Static Load Rating C_o		Extended Dynamic Load Rating C_E[2]	
		mm	in.	mm	in.	mm	in.	mm	in.	mm	in.	mm	in.			kg	lbs.	N	lbs.	N	lbs.
W208PPB13	1–1	22.2	7/8	80	3.1496	0.013	0.0005	36.53	1.438	18.00	0.709	9	1/2	80MS	0.735	1.62	19900	4500	36800	8300
W208PPB6	1–1	25.4	1	80	3.1496	0.013	0.0005	36.53	1.438	18.00	0.709	9	1/2	80MS	0.721	1.59	19900	4500	36800	8300
W208PPB5	1–1	28.6	1 1/8	80	3.1496	0.013	0.0005	36.53	1.438	18.00	0.709	9	1/2	80MS	0.667	1.47	19900	4500	36800	8300
W209PPB5	1–2	31.8	1 1/4	85	3.3465	0.015	0.0006	36.53	1.438	30.18	1.188	9	1/2	85MS	0.794	1.75	20200	4550	36800	8300
W210PPB4	2–	28.6	1 1/8	90	3.5433	0.015	0.0006	30.18	1.188	30.18	1.188	10	1/2	90MS	0.957	2.11	23000	5200	39900	9000
W210PPB6	1–	28.6	1 1/8	90	3.5433	0.015	0.0006	36.53	1.438	30.18	1.188	10	1/2	90MS	1.021	2.25	23000	5200	39900	9000
W211PPB3	2–2	38.1	1 1/2	100	3.9370	0.015	0.0006	33.34[1]	1.312	33.34	1.312	10	9/16	100MS	1.207	2.66	29000	6550	48800	11000

[1] Inner and outer width tolerance is .00 mm to -.15 mm (.000" to -.006").
[2] Based on 10^6 revolutions of calculated fatigue life.

TRI-PLY SEAL SERIES RELUBRICATABLE TYPE

- Similar in design and features to those shown on the preceding two pages.
- Includes a provision for relubrication.

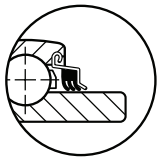

Figure 1

Figure 2

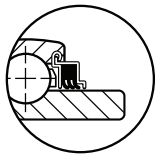

Figure 3

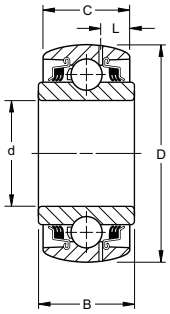

Type 1

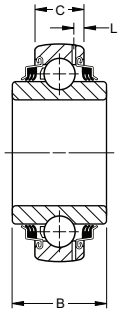

Type 2

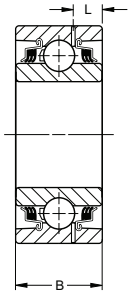

Type 3

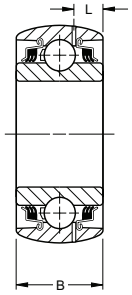

Type 4

ROUND BORE

Bearing Number	Type-Fig.	Bore d		tolerance +0.000 mm +0.0000" to minus		Outside Diameter D		tolerance +0.000 mm +0.0000" to minus		Ring Width +0.00 mm, -0.12 mm +0.000", -.005" B Inner		C Outer		Balls No.	Size	L		Wt.		Static Load Rating C_o		Extended Dynamic Load C_E[3]	
ROUND BORE		mm	in.	mm	in.	mm	in.	mm	in.	mm	in.	mm	in.		in.	mm	in.	kg	lbs.	N	lbs.	N	lbs.
GW209PPB4	4–2	39.00	1.5350	0.250	0.0100	85	3.3465	0.015	0.0006	30.18	1.188	30.18	1.188	9	1/2	8.79	0.346	0.748	1.65	20200	4550	36800	8300
GW209PPB2	4–2	45.00	1.7717	0.013	0.0005	85	3.3465	0.015	0.0006	30.18	1.188	30.18	1.188	9	1/2	8.79	0.346	0.653	1.44	20200	4550	36800	8300
GW209PPB11	2–2	45.24	1.7810	0.250	0.0100	85	3.3465	0.015	0.0006	36.53	1.438	22.00	0.866	9	1/2	4.55	0.179	0.621	1.37	20200	4550	36800	8300
GW210PP3	3–	37.53	1.4065	0.013	0.0005	90	3.5433	0.015	0.0006	30.18	1.188	30.18	1.188	10	1/2	9.02	0.355	1.021	2.25	23000	5200	39900	9000
GW210PPB5	4–	45.34	1.7850	0.250	0.0100	90	3.5433	0.015	0.0006	30.18	1.188	30.18	1.188	10	1/2	9.02	0.355	0.794	1.75	23000	5200	39900	9000
GW210PPB2	4–	49.23	1.9380	0.013	0.0005	90	3.5433	0.015	0.0006	30.18	1.188	30.18	1.188	10	1/2	9.02	0.355	0.681	1.50	23000	5200	39900	9000
GW210PP9[1]	2–	49.40	1.9450	0.180	0.0070	90	3.5433	0.015	0.0006	36.53	1.438	23.00	0.906	10	1/2	4.70	0.185	0.794	1.75	23000	5200	39900	9000
GW211PPB13	2–2	45.34	1.7850	0.250	0.0100	100	3.9370	0.015	0.0006	33.34	1.312	25.00	0.984	10	9/16	5.82	0.299	0.916	2.02	29000	6550	48800	11000
GW211PPB10	4–2	49.23	1.9380	0.015	0.0006	100	3.9370	0.015	0.0006	33.34[2]	1.312	33.34	1.312	10	9/16	9.96	0.392	1.025	2.26	29000	6550	48800	11000
GW211PPB14	2–2	51.18	2.0150	0.250	0.0100	100	3.9370	0.015	0.0006	33.34[2]	1.312	25.00	0.984	10	9/16	5.82	0.229	0.907	2.00	29000	6550	48800	11000
GW211PP2	3–2	55.58	2.1880	0.015	0.0006	100	3.9370	0.015	0.0006	33.34[2]	1.312	33.34	1.312	10	9/16	9.96	0.392	1.361	3.00	29000	6550	48800	11000
GW211PPB2	4–2	55.58	2.1880	0.015	0.0006	100	3.9370	0.015	0.0006	33.34[2]	1.312	33.34	1.312	10	9/16	9.96	0.392	1.188	2.62	29000	6550	48800	11000
GW211PPB8	2–2	55.58	2.1880	0.015	0.0006	100	3.9370	0.015	0.0006	33.34[2]	1.312	25.00	0.984	10	9/16	5.82	0.229	0.839	1.85	29000	6550	48800	11000
GW211PPB9	2–2	55.75	2.1950	0.180	0.0070	100	3.9370	0.015	0.0006	39.69[2]	1.562	25.00	0.984	10	9/16	5.41	0.213	0.916	2.02	29000	6550	48800	11000
GW214PPB6	2–	68.28	2.6881	0.015	0.0006	125	4.9213	0.020	0.0008	68.26[2]	2.688	28.00	1.102	10	11/16	5.54	0.218	2.155	4.75	43500	9800	71000	16000
GW214PP2	3–	70.00	2.7559	0.015	0.0006	125	4.9213	0.020	0.0008	39.69[2]	1.562	39.69	1.562	10	11/16	10.52	0.414	1.901	4.19	43500	9800	71000	16000
GW214PPB2	4–	70.00	2.7559	0.015	0.0006	125	4.9213	0.020	0.0008	39.69[2]	1.562	39.69	1.562	10	11/16	10.52	0.414	1.796	3.96	43500	9800	71000	16000
GW214PPB5	1–	70.00	2.7559	0.015	0.0006	125	4.9213	0.020	0.0008	61.90[2]	2.438	39.69	1.562	10	11/16	10.52	0.414	2.155	4.75	43500	9800	71000	16000
GW216PPB3	2–3	76.45	3.0100	0.250	0.0100	140	5.5118	0.020	0.0008	63.50[2]	2.500	30.00	1.181	11	23/32	6.10	0.240	—	—	54000	12200	81000	18300
GW216PP5	3–3	63.88	2.5150	0.250	0.0100	140	5.5118	0.020	0.0008	63.50[2]	2.500	30.00	1.181	11	23/32	6.10	0.240	—	—	54000	12200	81000	18300

SQUARE BORE

		Shaft Size																					
SQUARE BORE		mm	in.	mm	in.	mm	in.	mm	in.	mm	in.		in.	mm	in.	kg	lbs.	N	lbs.	N	lbs.		
GW208PPB6	2–1	25.4	1	80	3.1496	0.013	0.0005	36.53	1.438	21.00	0.827	9	1/2	5.66	0.223	0.794	1.75	19900	4500	36800	8300		
GW208PPB5	2–1	28.6	1 1/8	80	3.1496	0.013	0.0005	36.53	1.438	21.00	0.827	9	1/2	5.66	0.223	0.667	1.47	19900	4500	36800	8300		
GW208PPB8	1–1	28.6	1 1/8	80	3.1496	0.013	0.0005	36.53	1.438	30.18	1.188	9	1/2	8.36	0.329	0.794	1.75	19900	4500	36800	8300		
GW208PPB17	3–1	28.6	1 1/8	80	3.3755	0.013	0.0005	36.53	1.438	30.18	1.188	9	1/2	8.28	0.326	0.925	2.04	19900	4500	36800	8300		
GW209PPB5	1–2	31.8	1 1/4	85	3.3456	0.015	0.0006	36.53	1.438	30.18	1.188	9	1/2	8.79	0.346	0.794	1.75	20200	4550	36800	8300		
GW209PPB8	2–2	31.8	1 1/4	85	3.3456	0.015	0.0006	36.53	1.438	22.00	0.866	9	1/2	4.55	0.179	0.748	1.65	20200	4550	36800	8300		
GW210PP4	3–	28.6	1 1/8	90	3.5433	0.015	0.0006	30.18	1.188	30.18	1.188	10	1/2	9.02	0.355	1.048	2.31	23000	5200	39900	9000		
GW210PPB4	4–	28.6	1 1/8	90	3.5433	0.015	0.0006	30.18	1.188	30.18	1.188	10	1/2	9.02	0.355	0.794	1.75	23000	5200	39900	9000		
GW211PP3	3–2	38.1	1 1/2	100	3.9370	0.015	0.0006	33.34[2]	1.312	33.34	1.312	10	9/16	9.96	0.392	1.266	2.79	29000	6550	48800	11000		
GW211PPB3	4–2	38.1	1 1/2	100	3.9370	0.015	0.0006	33.34[2]	1.312	33.34	1.312	10	9/16	9.96	0.392	1.207	2.66	29000	6550	48800	11000		
GW211PP17	3–2	38.1	1 1/2	100	3.9370	0.015	0.0006	44.45[2]	1.750	33.34	1.312	10	9/16	9.96	0.392	1.188	2.62	29000	6550	48800	11000		
GW214PPB4	4–	50.8	2	125	4.9213	0.020	0.0008	39.69[2]	1.562	39.69	1.562	10	11/16	10.52	0.414	2.155	4.75	43500	9800	71000	16000		
GW216PPB4	2–3	44.4	1 3/4	140	5.5118	0.020	0.0008	63.50[2]	2.500	30.00	1.181	11	23/32	6.10	0.240	—	—	54000	12200	81000	18300		
GW216PP2[1]	2–3	57.2	2 1/4	140	5.5118	0.020	0.0008	63.50[2]	2.500	30.00	1.181	11	23/32	6.10	0.240	—	—	54000	12200	81000	18300		
GW226PPB2	2–3	57.2	2 1/4	140	5.5118	0.020	0.0008	63.50[2]	2.500	30.00	1.181	11	23/32	6.10	0.240	—	—	54000	12200	81000	18300		

(1) Cylindrical O.D.

(2) Inner and outer width tolerance is .00 mm to-.15 mm (.000" to -.006").

(3) Based on 10^6 revolutions of calculated fatigue life.

TRI-PLY SERIES DISK HARROW UNITS

- The answer to versatility in design.
- For extra-special design needs, this unit incorporates a Tri-Ply bearing mounted in two stampings, riveted together with two o-rings.
- Available in two basic size groups, one incorporating a 209 and the other a 211 bearing.
- Both size groups offer these features:
  - Dynamic alignment capability (±3°).
  - Shroud effect from close clearance of stamping to inner ring.
  - Relubrication.
  - One unit piece for ease of handling and assembly.
  - Fitting flange mates with outer ring milled recess, preventing possibility of outer ring circumferential movement.
  - Stampings are case hardened to minimize wear.
  - Units are equipped with nylon retainer, molded one-piece seals and patented notched outer ring seal grooves.

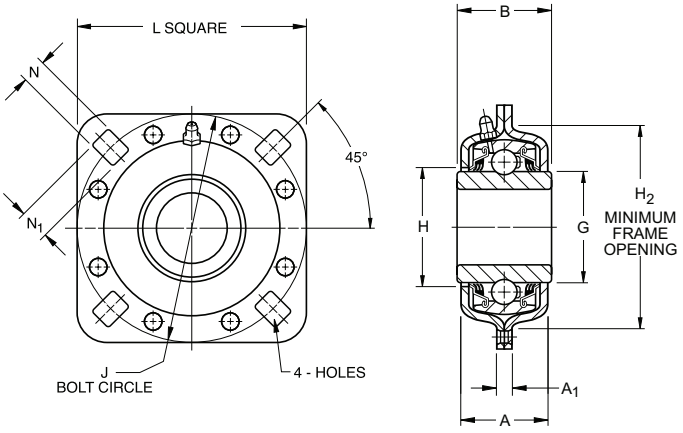

209 METRIC SERIES

Unit Number	Shaft Diameter	B	H_2	J	N_1	N	L	G Ref.	H	A	A_1	Static Load Rating C_o	Extended Dynamic Load Rating C_E[1]
	mm	mm	mm	mm	mm	mm	mm	mm	mm	mm	mm	N	N
DHU 30S–209	30 SQ.	43	101.6	127.0	16.7	13.5	127.0	57.9	59.9	42.5	6.7	18000	36500
DHU 40R–209	40 SQ.	43	101.6	127.0	16.7	13.5	127.0	57.9	59.9	42.5	6.7	18000	36500
DHU 45R–209	45 RD.	43	101.6	127.0	16.7	13.5	127.0	57.9	59.9	42.5	6.7	18000	36500
211 METRIC SERIES													
DHU 40S–211	40 SQ.	51	113.5	139.7	15.1	13.5	139.7	69.7	73.0	49.2	7.5	25000	48000
DHU 50R–211	50 RD.	51	113.5	139.7	15.1	13.5	139.7	69.7	73.0	49.2	7.5	25000	48000
DHU 55R–211	55 RD.	51	113.5	139.7	15.1	13.5	139.7	69.7	73.0	49.2	7.5	25000	48000

209 SERIES

Unit Number	Shaft Diameter	B	H_2	J	N_1	N	L	G Ref.	H	A	A_1	Static Load Rating C_o	Extended Dynamic Load Rating C_E[1]
	in.	in.	in.	in.	in.	in.	in.	in.	in.	in.	in.	lbs.	lbs.
DHU 1½ R–209	1 ½ RD.	1 11/16	4	5	21/32	17/32	5	2.279	2 23/64	1 43/64	17/64	4000	8150
DHU 1⅛ S–209	1 ⅛ SQ.	1 11/16	4	5	21/32	17/32	5	2.279	2 23/64	1 43/64	17/64	4000	8150
DHU 1¾ R–209	1 ¾ RD.	1 11/16	4	5	21/32	17/32	5	2.279	2 23/64	1 43/64	17/64	4000	8150
DHU 1¼S–209	1 ¼ SQ.	1 ¾	4	5	21/32	17/32	5	2.279	2 23/64	1 43/64	17/64	4000	8150
DHU 491 A	1 ¾ RD.	1 ¾	4	5	21/32	17/32	5	2.279	2 23/64	1 43/64	17/64	4000	8150
211 SERIES													
DHU 1½ S–211	1 ½ SQ.	2	4	5 ½	19/32	17/32	5 ½	2.746	2 7/8	1 15/16	19/64	5600	10800
DHU 1¾ R–211	1 ¾ RD.	2 ⅛	4	5 ½	19/32	17/32	5 ½	2.746	2 7/8	1 15/16	19/64	5600	10800
DHU 2 3/16 R–211	2 3/16 RD.	2 3/16	4	5 ½	19/32	17/32	5 ½	2.746	2 7/8	1 15/16	19/64	5600	10800

(2) Based on 10^6 revolutions of calculated fatigue life.

HEX BORE BEARINGS

- Designed to be used for outer or inner ring rotation in low-speed, moderately-loaded applications, primarily in agricultural implements and conveyors.
- Tolerances of the hex bore are suitable for mounting on cold rolled hex shafting.
- Main advantage is ease of mounting. Except for axial positioning by adjacent parts, no collars, setscrews or other locking devices are required to lock the inner ring to the hex shaft.
- Utilize the R-Type shroud seal.

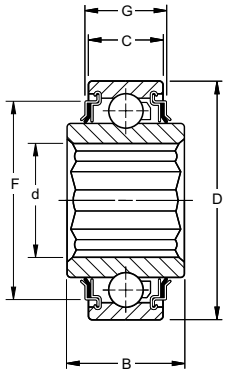

Type 1

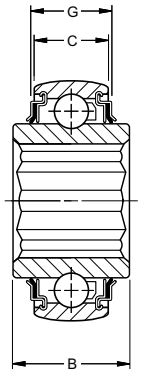

Type 2

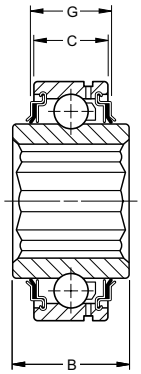

Type 3

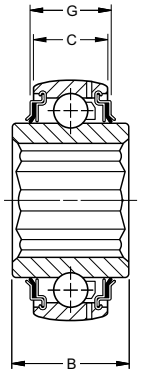

Type 4

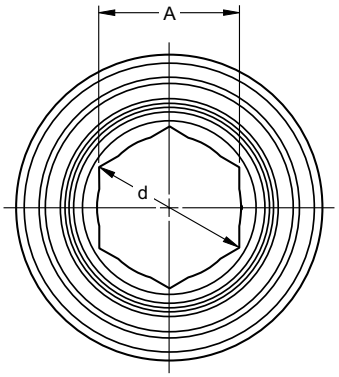

Bearing Number	Type	Hex Shaft Size	A Across Flats mm	A Across Flats in.	Hex Bore tolerance -0.00 mm +0.000" to plus mm	Hex Bore tolerance -0.00 mm +0.000" to plus in.	d Across corners min. mm	d Across corners min. in.	Outside Diameter D tolerance +0.000 mm +0.0000" to minus mm	Outside Diameter D tolerance +0.000 mm +0.0000" to minus in.	Width +0.000 mm +0.0000" C Outer mm	Width +0.000 mm +0.0000" C Outer in.	Width -0.12 mm -.005" B Inner mm	Width -0.12 mm -.005" B Inner in.	F mm	F in.	G mm	G in.	Balls No.	Balls Size	Wt. kg	Wt. lbs.	Static Load Rating C_0 N	Static Load Rating C_0 lbs.	Extended Dynamic Load Rating C_E[3] N	Extended Dynamic Load Rating C_E[3] lbs.
NON-RELUBRICATABLE TYPE																										
202KRR3	1	9/16	14.30	0.563	0.13	0.005	16.46	0.648	35	1.3780	0.013	0.0005	11	0.433	13.00	0.512	—	—	—	—	8	7/32	0.054	0.12	4400	1000	10600	2360
204KRR2	1	11/16	17.65	0.695	0.13	0.005	20.22	0.796	47	1.8504	0.013	0.0005	14	0.551	20.96	0.825	—	—	—	—	8	5/16	0.145	0.32	6200	1400	14300	3200
205KRR2	1	7/8	22.25	0.876	0.13	0.005	25.65	1.010	52	2.0472	0.013	0.0005	15	0.591	25.40	1.000	—	—	—	—	9	5/16	0.200	0.44	6950	1560	15600	3450
205KRRB2	2	7/8	22.25	0.876	0.13	0.005	25.65	1.010	52	2.0472	0.013	0.0005	15	0.591	25.40	1.000	—	—	—	—	9	5/16	0.200	0.44	6950	1560	15600	3450
205PPB13[1]	2	7/8	22.25	0.876	0.13	0.005	25.65	1.010	52	2.0472	0.013	0.0005	15	0.591	25.40	1.000	42.67	1.680	20.19	0.795	9	5/16	0.200	0.44	6950	1560	15600	3450
206KPP3[1]	1	1	25.43	1.001	0.13	0.005	29.31	1.154	62	2.4409	0.013	0.0005	16	0.630	24.00	0.945	52.07	2.050	19.56	0.770	9	3/8	0.345	0.76	10000	2280	21600	4800
206KPPB3[1]	2	1	25.43	1.001	0.13	0.005	29.31	1.154	62	2.4409	0.013	0.0005	18	0.709	24.00	0.945	52.07	2.050	19.56	0.770	9	3/8	0.345	0.76	10000	2280	21600	4800
206KRR6	1	1	25.43	1.001	0.13	0.005	29.31	1.154	62	2.4409	0.013	0.0005	16	0.630	24.00	0.945	52.07	2.050	19.56	0.770	9	3/8	0.341	0.75	10000	2280	21600	4800
206KRRB6	2	1	25.43	1.001	0.13	0.005	29.31	1.154	62	2.4409	0.013	0.0005	18	0.709	24.00	0.945	52.07	2.050	19.56	0.770	9	3/8	0.341	0.75	10000	2280	21600	4800
207KPP3	1	1 1/4	31.77	1.251	0.13	0.005	36.40	1.433	72	2.8346	0.013	0.0005	17	0.669	37.70	1.484	60.35	2.376	19.68	0.775	9	7/16	0.454	1.00	13700	3050	28500	6400
207KPPB3	2	1 1/4	31.77	1.251	0.13	0.005	36.40	1.433	72	2.8346	0.013	0.0005	17	0.669	25.00	0.984	60.35	2.376	19.68	0.775	9	7/16	0.395	0.87	13700	3050	28500	6400
207KRRB9	2	1 1/8	28.60	1.126	0.13	0.005	32.97	1.298	72	2.8346	0.013	0.0005	17	0.669	37.70	1.484	60.35	2.376	19.68	0.775	9	7/16	0.454	1.00	13700	3050	28500	6400
207KRRB12	2	1 1/8	28.60	1.126	0.13	0.005	32.97	1.298	72	2.8346	0.013	0.0005	17	0.669	25.00	0.984	60.35	2.376	19.68	0.775	9	7/16	0.395	0.87	13700	3050	28500	6400
207KRR17	1	1 1/4	31.77	1.251	0.13	0.005	36.65	1.443	72	2.8346	0.013	0.0005	17	0.669	25.00	0.984	60.35	2.376	19.68	0.775	9	7/16	0.395	0.87	13700	3050	28500	6400
207KRRB17	2	1 1/4	31.77	1.251	0.13	0.005	36.65	1.443	72	2.8346	0.013	0.0005	17	0.669	25.00	0.984	60.35	2.376	19.68	0.775	9	7/16	0.395	0.87	13700	3050	28500	6400
W208PPB16[1]	2	1 1/4	31.77	1.251	0.13	0.005	36.65	1.443	80	3.1496	0.013	0.0005	18	0.709	36.53	1.438	68.43	2.694	25.27	0.995	9	1/2	0.658	1.45	17600	4000	36000	8150
W208KRRB6	2	1 3/8	34.95	1.376	0.13	0.005	40.30	1.587	80	3.1496	0.013	0.0005	21	0.827	36.53	1.438	68.43	2.694	23.54	0.927	9	1/2	—	—	17600	4000	36000	8150
W208KRR8	1	1 1/4	31.77	1.251	0.13	0.005	36.65	1.443	80	3.1496	0.013	0.0005	18	0.709	36.53	1.438	68.43	2.694	20.45	0.805	9	1/2	0.658	1.45	17600	4000	36000	8150
209KRRB2	2	1 1/2	38.12	1.501	0.13	0.005	43.99	1.732	85	3.3456	0.015	0.0006	19	0.748	30.00	1.181	73.86	2.908	23.27	0.916	9	1/2	0.576	1.27	17600	4000	36000	8150
W210PPB7[1]	2	1 5/8	41.30	1.626	0.13	0.005	47.65	1.876	90	3.5433	0.015	0.0006	30.18	1.188	30.18	1.188	—	—	—	—	10	1/2	0.794	1.75	19600	4500	39000	8800
RELUBRICATABLE TYPE																										
G206KPP4[1]	3	1	25.43	1.001	0.13	0.005	29.26	1.152	62	2.4409	0.13	0.005	18	0.709	24.00	0.945	—	—	—	—	9	3/8	0.281	0.62	10000	2280	21600	4800
G206KPPB4[1]	4	1	25.43	1.001	0.13	0.005	29.26	1.152	62	2.4409	0.13	0.005	18	0.709	24.00	0.945	52.07	2.050	19.56	0.770	9	3/8	0.277	0.61	10000	2280	21600	4800
G206KRRB6	4	1	25.43	1.001	0.13	0.005	29.26	1.152	62	2.4409	0.13	0.005	18	0.709	24.00	0.945	52.07	2.050	19.56	0.770	9	3/8	0.268	0.59	10000	2280	21600	4800
G207KPPB2[1]	4	1 1/8	28.60	1.126	0.13	0.005	32.97	1.298	72	2.8346	0.13	0.005	19	0.748	37.70	1.484	60.32	2.375	25.40	1.000	9	7/16	0.454	1.00	13700	3050	28500	6400
GW208KRRB5	4	1 1/4	31.77	1.251	0.13	0.005	36.65	1.443	80	3.1496	0.13	0.005	21	0.827	36.51	1.438	60.35	2.694	22.43	0.883	9	1/2	0.635	1.40	17600	4000	36000	8150
GW208PPB22[1]	2	1 1/4	31.88	1.255	0.13	0.005	36.75	1.447	80	3.1496	0.13	0.005	21	0.827	36.51	1.438	52.07	2.050	28.32	1.115	9	1/2	0.681	1.50	17600	4000	36000	8150
GC1200KPPB2[1]		1 3/4	44.48	1.751	0.13	0.005	51.31	2.020	100	3.9370	0.015	0.0006	25[2]	0.984	57.15	2.250	86.11	3.390	29.01	1.142	10	9/16	1.521	3.35	19600	4500	39000	8800

[1] Tri-Ply Seal bearing.
[2] Inner and outer ring tolerance is .00 mm to -15 mm (.000" to -.006").
[3] Based on 10^6 revolutions of calculated fatigue life.

LIGHT 200 SERIES R-SEAL TYPE

- Consists of deep groove, Conrad-type bearings.
- Incorporates a flare-out, contact R-Seal.
- Synthetic rubber impregnated washer is enclosed between two metal shields, providing excellent protection against contaminants.
- Because of the heavy contact seal, this series is normally employed in moderate-speed service.

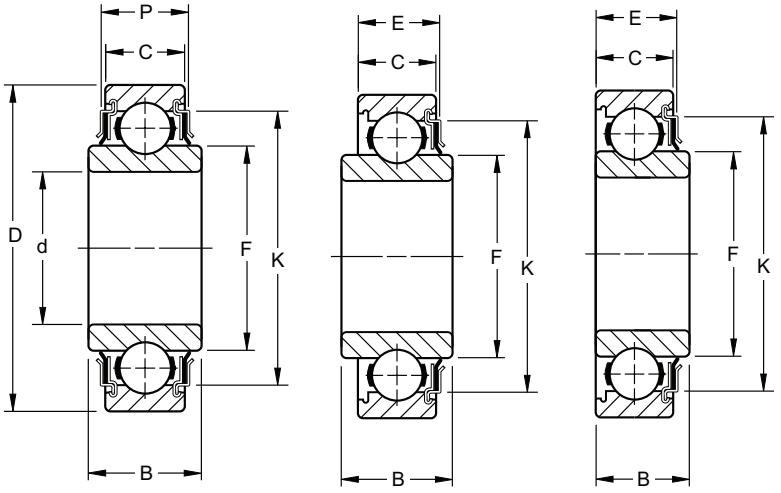

Type 1 Type 2 Type 3

DIMENSIONS – TOLERANCES

Bearing Type Number		Bore d tolerance +0.000 mm +0.0000" to minus				Outside Diameter D tolerance +0.000 mm +0.0000" to minus				Width +0.00 -0.12 mm +0.000 -.005" B Inner		C Outer		E Max.		P Max.		K Max.		Fillet Radius(1)		F		Static Load Rating C_0		Extended Dynamic Load Rating C_E(3)	
		mm	in.	mm	in.	mm	in.	mm	in.	mm	in.	mm	in.	mm	in.	mm	in.	mm	in.	mm.	in.	mm.	in.	N	lbs.	N	lbs.
203KR2	3	15.883	0.6253	0.008	0.0003	40	1.5748	0.013	0.0005	14.00	0.551	12	0.472	—	—	—	—	—	—	0.6	0.024	24.44	0.962	4700	1060	10900	2450
203KRR2	1	16.256	0.6400	0.130	0.0005	40	1.5748	0.013	0.0005	18.29	0.720	12	0.472	—	—	—	—	—	—	0.6	0.024	24.44	0.962	4700	1060	10900	2450
203KRR5	1	13.081	0.5150	0.130	0.0005	40	1.5748	0.013	0.0005	18.29	0.720	12	0.472	—	—	—	—	—	—	0.6	0.024	24.44	0.962	4700	1060	10900	2450
203KRR7	1	17	0.6693	0.008	0.0003	40	1.5748	0.013	0.0005	16.61	0.654	12	0.472	—	—	—	—	—	—	0.6	0.024	24.44	0.962	4700	1060	10900	2450
204KR2	3	19.063	0.7505	0.013	0.0005	45.225	1.7805	0.013	0.0005	15.49	0.610	15.49	0.610	—	—	—	—	—	—	1	0.039	28.73	1.131	6500	1460	14400	3250
204KRR3	1	20	0.7874	0.010	0.0004	47	1.8504	0.013	0.0005	17.75	0.699	14	0.551	—	—	—	—	—	—	1	0.039	28.73	1.131	6500	1460	14400	3250
205KR4	2	25.413	1.0005	0.013	0.0005	52	2.0472	0.013	0.0005	25.40	1.000	15	0.591	15.875	0.625	—	—	42.67	1.68	1	0.039	33.81	1.331	7800	1760	16000	3600
206KR7	2	30	1.1811	0.010	0.0004	62	2.4409	0.013	0.0005	24.00	0.945	16	0.630	17.780	0.700	—	—	52.07	2.05	1	0.039	40.28	1.586	11300	2550	21800	4900
206KRR8	1	30	1.1811	0.013	0.0004	62	2.4409	0.013	0.0005	24.00	0.945	16	0.630	—	—	19.56	0.77	52.07	2.05	1	0.039	39.09	1.539	11300	2250	21800	4900
207KRR	1	35	1.3780	0.013	0.0005	72	2.8346	0.013	0.0005	25.00	0.984	17	0.669	—	—	19.68	0.775	60.35	2.376	1	0.039	46.94	1.848	15000	3450	29000	6550
208KRR2	1	40	1.5748	0.013	0.0005	80	3.1496	0.013	0.0005	27.00	1.063	21	0.827	—	—	21.31	0.839	68.45	2.695	1	0.039	52.25	2.057	19800	4460	36200	8130
209KRR3	1	45	1.7717	0.013	0.0005	85	3.3465	0.013	0.0005	27.00	1.063	21	0.827	—	—	24.18	0.952	72.42	2.851	1	0.039	57.89	2.279	20500	4600	36300	8160
210KRR	1	50	1.9685	0.013	0.0005	90	3.5433	0.015	0.0006	30.00	1.181	20	0.787	—	—	24.03	0.946	77.60	3.055	1	0.039	62.81	2.473	23100	5200	40000	9000
212KRR	1	60	2.3622	0.015	0.0006	110	4.3307	0.015	0.0006	36.00(2)	1.417	22	0.886	—	—	30.02	1.182	99.87	3.932	1	0.039	76.45	3.010	35500	8000	58600	13200

(1) Maximum shaft or housing fillet radius which bearing corners will clear.
(2) Inner and outer width tolerance is .00 mm to -.15 mm (.000" to .0006").
(3) Based on 10^6 revolutions of calculated fatigue life.

FARM RADIAL SPECIALS

BEARING NUMBER 202NPP9

SPECIAL FEATURES
- ½ in. Bore
- O.D. corner turned to a ¾ in. radius
- Special heavy stiff seals of Buna-N rubber
- Crimped-in seal

TYPICAL APPLICATIONS
Cam Follower

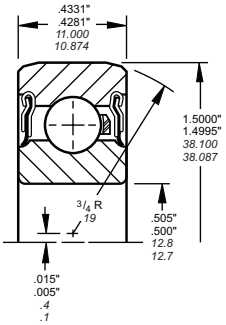

BEARING NUMBER 202KRR7

SPECIAL FEATURES
- ½ in. Bore
- 1½ in. O.D.
- Thick outer ring

TYPICAL APPLICATIONS
Cam Follower

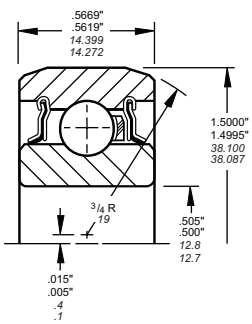

Continued on the next page.

FARM RADIAL SPECIALS *(continued)*

BEARING NUMBER 203KRR3

SPECIAL FEATURES
- 5/8 in. Bore
- 2 in. O.D.
- Thick outer ring

TYPICAL APPLICATIONS
Cam Follower
Guide Rolls for Baler Plunger

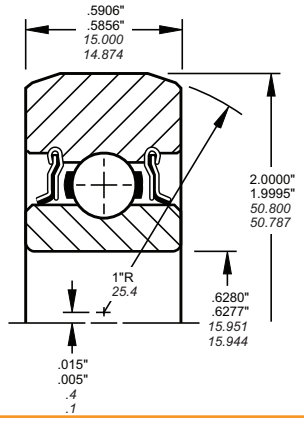

BEARING NUMBER P204RR6

SPECIAL FEATURES
- 3/4 in. Bore
- 1.7805 in. O.D.
- Replaces 204KRNP2

TYPICAL APPLICATIONS
Mower Spindle

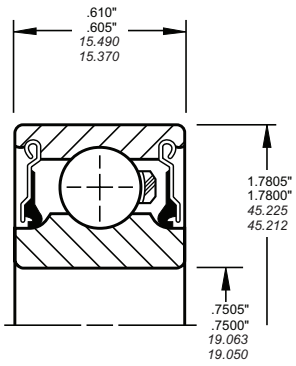

BEARING NUMBER 203KRR6

SPECIAL FEATURES
- 5/8 in. Bore
- 47 mm O.D.
- Thick outer ring

TYPICAL APPLICATIONS
Idler Pulley
Idler Sprocket

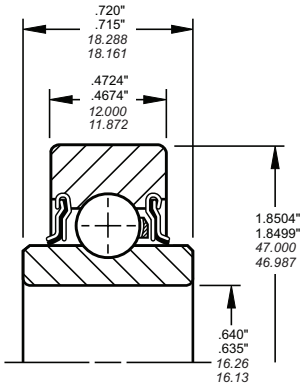

BEARING NUMBER 204RR7

SPECIAL FEATURES
- 3/4 in. Bore
- 1.7805 in. O.D.
- Replaces 204KRNP3

TYPICAL APPLICATIONS
Rolling Cultivator
Disk

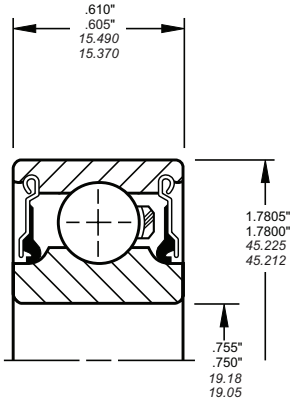

BEARING NUMBER 203NPP9

SPECIAL FEATURES
- 5/8 in. Bore
- Width .500"

TYPICAL APPLICATIONS
Disk Grain Drill

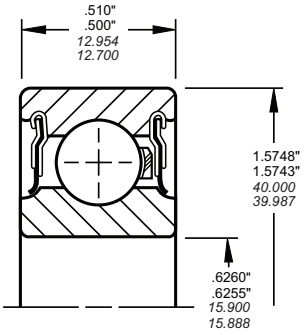

BEARING NUMBER 205KR3

SPECIAL FEATURES
- 3/4 in. Bore
- Excellent moment load capacity available from special internal geometry of races
- Heavy contact flare-out type R-Seal with shroud cap

TYPICAL APPLICATIONS
Disk Hiller, Planter

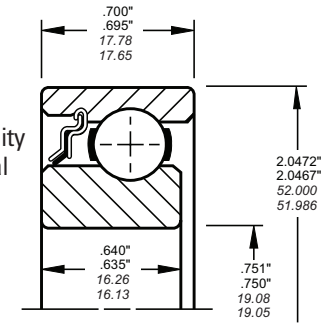

BEARING NUMBER 204RY2

SPECIAL FEATURES
- 5/8 in. Bore
- Gothic Arch Race

TYPICAL APPLICATIONS
Planter
Double Disk Opener

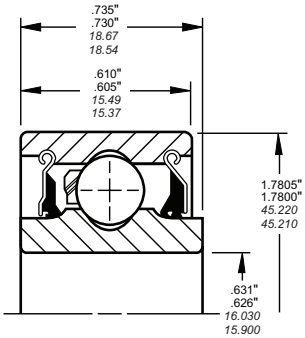

BEARING NUMBER 205KP6

SPECIAL FEATURES
- 3/4 in. Bore
- Tri-Ply Seal on one side with shroud cap

TYPICAL APPLICATIONS
Rolling Cultivator

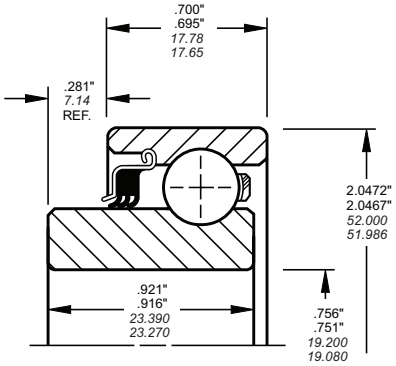

Continued on the next page.

FARM RADIAL SPECIALS *(continued)*

BEARING NUMBER 205KRR6

SPECIAL FEATURES
- ½ in. Bore
- Extended inner ring

TYPICAL APPLICATIONS
Potato Harvester

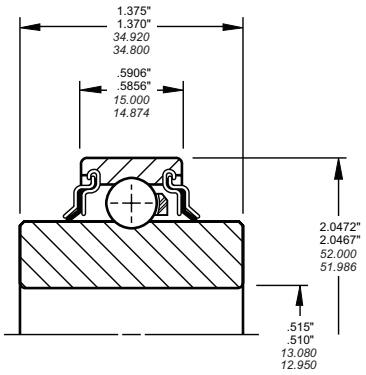

BEARING NUMBER 208NPPB5

SPECIAL FEATURES
- 1 7/16 in. Bore
- PP Seals with shroud cap

TYPICAL APPLICATIONS
Baler Crank Pin

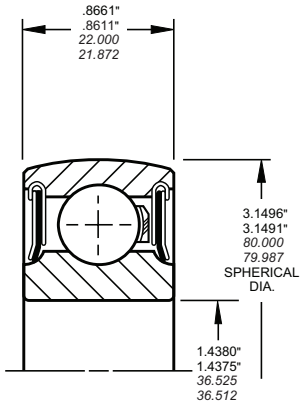

BEARING NUMBER 206KP2

SPECIAL FEATURES
- Tri-Ply Seal on one side with shroud cap

TYPICAL APPLICATIONS
Combine

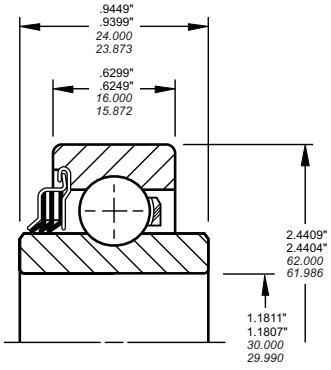

BEARING NUMBER 208PPB12

SPECIAL FEATURES
- 1⅛ in. Square Bore
- Molded Tri-Ply seal
- Heavy outer ring

TYPICAL APPLICATIONS
Disk Harrow

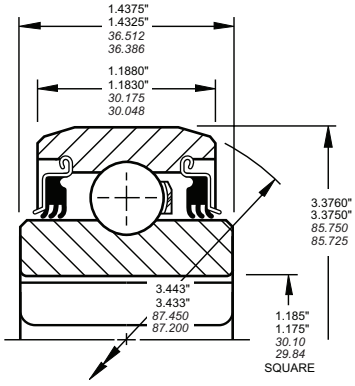

BEARING NUMBER 207KRR14

SPECIAL FEATURES
- 1¼ in. Bore

TYPICAL APPLICATIONS
Disk Harrow
Transport Wheel

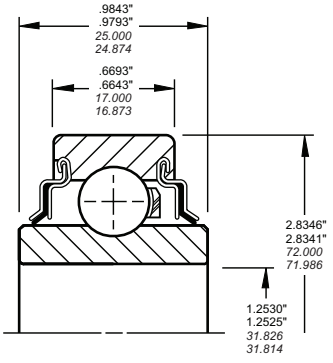

BEARING NUMBER W211PPB6

SPECIAL FEATURES
- 1½ in. Square Bore
- Tri-Ply seal with shroud cap
- Heavy outer ring

TYPICAL APPLICATIONS
Disk Harrow

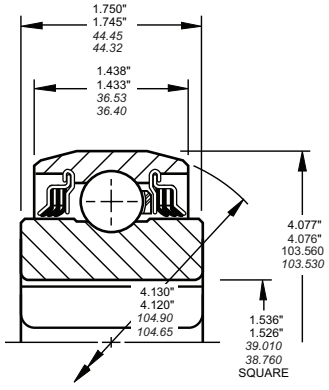

BEARING NUMBER 207KYY

SPECIAL FEATURES
- Molded double lip seal

TYPICAL APPLICATIONS
Disk Harrow
Transport Wheel

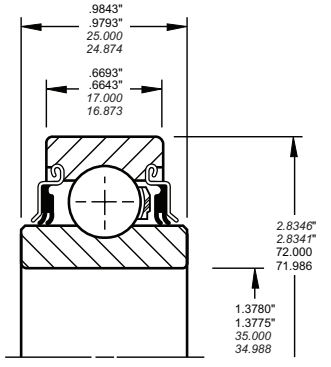

BEARING NUMBER G1104KRXB2

SPECIAL FEATURES
- Oil Seal on one side

TYPICAL APPLICATIONS
Chain Case

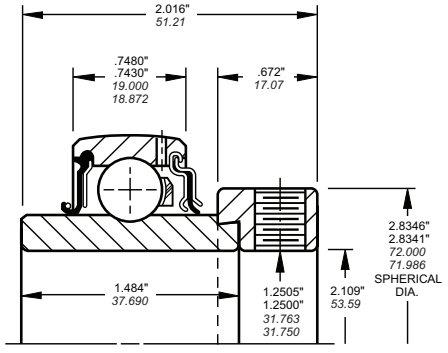

SPECIAL BEARINGS

Size	Special Features	Typical Application
200KRR3	Inner Ring Width .6457/.6407 One piece molded seals	Windrower
J202KRR8	Extended Inner Width .880/.875	Tobacco Harvester
202NPP9	½" Bore-O.D. corner turned to ¾" radius	Baler Cam Foller
P202NPP11	Extra Wide Inner .5669/.5619 Bore 16mm .6299/.6296	Cam Follower
P203KRR3	⅝" Bore 2" O.D. Heavy section outer ring	Cam Follower Guide Rolls for Baler Plunger
203KRR6	⅝" Bore 47mm O.D.Heavy section outer ring	Baler Pick-up
203NPP9	⅝" Bore .500" width	Disk Grain Drill Opener
P203PP10	.6255/.6260" Bore	Light Duty Disk Applications
BB203KRR2 A2139	Wide Inner .720/.715 Bore .6400/.6350 Gothic arch races	Rotary Hoe
P204KR2	Bore .7505/.7500 Width .610/.605 O.D. 1.7805/1.7800	Rotary Lawn Tractor Blade Spindle Bearing
204KRD4	⅝" Bore extended inner R-Seal side .689/.685	Disk Opener Seed Drill
204KRNP5	Bore .631/.626 Extended Inner Width 1.125/1.120	Planter Opener Wheels
P204KRRB5	Bore .793/.788 Inner Width .6988/.6938	Row Crop Machine
204RR6 E8728	Ground Bore .7505/.7500 Width .610 O.D. 1.7805 Extra loose radial play. Replaces 204KRNP2 E8728	Planter Gage Wheels
P204RR6	Same as above except standard radial play. Replaces 204KRNP2	Garden Tractor Mower Spindle
H204KRNP6	Bore, O.D., Width same as P204KR2	Planter
204RR7 E8728	¾" Bore 1.7805 O.D. .610 Width Extra loose radial play. Replaces 204KRNP2 E8728	Rolling Cultivator Disk Sprockets, Pulleys and Disk Opener
205NPP2	Inner Width .6594/.6544	Miscellaneous
205KR3	¾" Bore , Special Races, Heavy R-Seal with Shroud Cap	Disk Hiller Planter and Cotton Picker
205KP6	¾" Bore Tri-Ply seal on one side with shroud cap	Rolling Cultivator Coulter Bearing
205KRR6	½" Bore extended inner ring	Windrow Digger
205KRR7	½" Bore 1.500/1.495 Extended Inner Ring with Offset race	Cone Roller Beet and Potato Harvester
205PPB7 FS544	$15/16$" Bore Tri-Ply Seals 1.375/1.3760 Inner Width	Rolling Cultivator
G205KPRB11	⅞" Hex Bore, One R-Seal and one Tri-Ply Seal Inner Width 1.000/.975	Corn Head Mechanism
205PP9 FS544	¾" Bore Inner Width 1.3750/1.3700 Tri-Ply Seals	Cultivator
205PP10	⅝" Bore Inner Width 1.375/1.370 Tri-Ply Seals	Potato Harvester
205PP11	1" Bore Inner Width 1.187/1.185 Tri-Ply Seals	Marker Wheel

Size	Special Features	Typical Application
205PP12	⅝" Bore Inner Width 1.500/1.495 Tri-Ply Seals	Cone Roller, Beet and Potato Harvester
205PP13	⅞" Hex Bore Inner Width 1.000/.995 Tri-Ply Seals	Corn Head Mechanism
206KRD	Offset Rings Inner Width .748/.743 Outer Width .6299/.6249 R-Seal on extended inner side	Combine
206KP2	Tri-Ply Seal one side Wide Inner Ring .9449/.9399	Combine
206KPP2	Tri-Ply Seals Wide Inner Ring .9449/.9399	Forrage Harvester
H206KRP2 A1391	¾" Bore Wide Inner Ring .9449/ .9399 Extended on R-Seal side	Disk Hiller and Bedders
206KPPB3	1" Hex Bore Tri-Ply Seals Inner Ring Width .9449/.9399	Disk Harrow
206KRR4	Large Inner Ring Bore Corner to clear .090 R Shaft Fillet	Drive Shaft Bearing
206KRRB3	1⅛ Bore Flare out type R-Seal with Shroud Cap	Corn Picker Snapping Rolls
206KRRB9	1" Bore Inner Width .9450/.9400	Planter
206KRR13	¾" Bore	Idler Sprocket Bearing for round Baler
207KRR3	Large Inner Ring Bore Corner to clear .090 R Shaft Fillet	Trencher
207KRR8	Large Inner Ring Bore Corner to clear .090 R Shaft Fillet Narrow Inner .8499/.8399"	Baler
P207KRRB10	1¼ Bore Flare out type R-Seal with Shroud Cap	Corn Picker Snapping Rolls
207KRR12	1⅛" Hex Bore	Forage Harvester
P207KRNPB13	Bore 1.2505/1.2500 Extended Inner 1.000/.945 on R-Seal Side	Corn Picker Gathering Chain
207KRR14	Bore 1.2530/1.2525	Disk Harrow Transport Wheel
207KYY	Double Lip Seal	Disk Harrow Transport Wheel
P208KRR4 A1849	Bore 1.5312/1.5307 Large Inner Ring Bore Corner to clear .090R Shaft Fillet	Clutch Shaft
208NPPB5	Bore 1.4380/1.4375 Plya Seals with Shroud Cap	Crank Pin for Square Baler
209KRRB2	1" Hex Bore	Round Baler
304KR2	Offset Inner Ring with .7087/ .7037 Width	Tractor Water Pump
BB9105KRR2	1" Bore Inner Extended on one side with 1.000/.995 Width Two 17/64 dia. holes in Inner Ring 180° apart	Hay Rake
9113KDD3 FS264C	Cap Extends Past Inner Face on one side	PTO Drive
9114KDD3 FS264C	Cap Extends Past Inner Face on one side	PTO Drive
9117K3	Bore 3.2500/3.2492 O.D. 5.000/4.9992	PTO Drive

XLS/BIC SERIES – CONRAD TYPE

- An inch-dimension series with extra large diameters.
- Conrad or non-filling slot design.
- Compact sections for adaptability in applications where space is restricted.

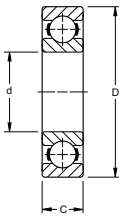

DIMENSIONS – TOLERANCES

Bearing Number	Bore d		tolerance +0.000 mm +0.0000" to minus		Outside Diameter D		tolerance +0.000 mm +0.0000" to minus		Width C		tolerance +0.000 mm +0.0000" to minus		Fillet Radius(1)		Wt.		Static Load Rating C_o		Extended Dynamic Load Rating C_E(2)	
	mm	in.	mm	in.	mm	in.	mm	in.	mm	in.	mm	in.	mm	in.	kg	lbs.	N	lbs.	N	lbs.
XLS44K	69.850	2.7500	0.015	0.0006	104.775	4.1250	0.015	0.0006	17.460	0.6875	0.13	0.005	1.2	0.047	0.449	0.99	22000	4900	28500	6400
XLS48K2	76.200	3.0000	0.015	0.0006	114.300	4.5000	0.015	0.0006	19.050	0.7500	0.13	0.005	1.2	0.047	0.567	1.25	33500	7500	44000	9800
XLS52K	82.550	3.2500	0.020	0.0008	120.650	4.7500	0.020	0.0008	19.050	0.7500	0.13	0.005	1.2	0.047	0.626	1.38	30000	6700	35500	8000
XLS56K	88.900	3.5000	0.020	0.0008	127.000	5.0000	0.020	0.0008	19.050	0.7500	0.13	0.005	1.7	0.065	0.671	1.48	31500	7100	36500	8150
XLS60K2	95.250	3.7500	0.020	0.0008	133.350	5.2500	0.020	0.0008	19.050	0.7500	0.13	0.005	1.6	0.063	0.712	1.57	34500	7800	39000	8650
XLS64K2	101.600	4.0000	0.020	0.0008	142.849	5.6240	0.025	0.0010	22.230	0.8750	0.13	0.005	2.0	0.080	0.794	1.75	41500	9500	47500	10600
41BIC196	104.648	4.1250	0.020	0.0008	152.400	6.0000	0.025	0.0010	22.230	0.8750	0.20	0.008	2.5	0.100	1.471	3.24	47500	10600	55000	12500
42BIC196	107.950	4.2500	0.020	0.0008	152.400	6.0000	0.025	0.0010	22.230	0.8750	0.20	0.008	2.5	0.100	1.374	3.03	47500	10600	55000	12500
43BIC206	111.125	4.3750	0.020	0.0008	158.750	6.2500	0.025	0.0010	22.230	0.8750	0.20	0.008	2.5	0.100	1.542	3.40	51000	11400	57000	12900
XLS72KD2	114.300	4.5000	0.020	0.0008	158.730	6.2490	0.025	0.0010	22.230	0.8750	0.20	0.008	2.0	0.080	1.121	2.47	54000	12000	60000	13400
45BIC206	114.300	4.5000	0.020	0.0008	158.750	6.2500	0.025	0.0010	22.230	0.8750	0.20	0.008	2.5	0.100	1.442	3.18	51000	11400	57000	12900
46BIC216	117.475	4.6250	0.020	0.0008	165.100	6.5000	0.025	0.0010	22.230	0.8750	0.20	0.008	2.5	0.100	1.615	3.56	54000	12000	58500	13200
47BIC216	120.650	4.7500	0.025	0.0010	165.100	6.5000	0.025	0.0010	22.230	0.8750	0.25	0.010	2.5	0.100	1.512	3.33	57000	12700	61000	13700
48BIC225	123.825	4.8750	0.025	0.0010	177.800	7.0000	0.025	0.0010	25.400	1.0000	0.25	0.010	2.5	0.100	2.254	4.97	65500	15000	75000	16600
XLS76K2	120.650	4.7500	0.025	0.0010	165.100	6.5000	0.025	0.0010	22.230	0.8750	0.25	0.010	1.7	0.065	1.157	2.55	57000	12700	61000	13700
XLS80K2	127.000	5.0000	0.025	0.0010	177.775	6.9990	0.025	0.0010	25.400	1.0000	0.25	0.010	2.0	0.080	1.611	3.55	67000	15000	72000	16300
50BIC225	127.000	5.0000	0.025	0.0010	177.800	7.0000	0.025	0.0010	25.400	1.0000	0.25	0.010	2.5	0.100	2.3	5.0	65500	15000	75000	16600
51BIC240	130.175	5.1250	0.025	0.0010	184.150	7.2500	0.030	0.0012	25.400	1.0000	0.25	0.010	2.5	0.100	2.5	5.5	69500	15600	76500	17300
52BIC240	133.350	5.2500	0.025	0.0010	184.150	7.2500	0.030	0.0012	25.400	1.0000	0.25	0.010	2.5	0.100	2.4	5.2	69500	15600	76500	17300
53BIC247	136.525	5.3750	0.025	0.0010	190.500	7.5000	0.030	0.0012	25.400	1.0000	0.25	0.010	2.5	0.100	2.6	5.7	75000	16600	80000	17600
55BIC247	139.700	5.5000	0.025	0.0010	190.500	7.5000	0.030	0.0012	25.400	1.0000	0.25	0.010	2.5	0.100	2.5	5.4	75000	16600	80000	17600
56BIC251	142.875	5.6250	0.025	0.0010	196.850	7.7500	0.030	0.0012	25.400	1.0000	0.25	0.010	2.5	0.100	2.7	5.9	75000	16600	80000	17600
57BIC251	146.050	5.7500	0.025	0.0010	196.850	7.7500	0.030	0.0012	25.400	1.0000	0.25	0.010	2.5	0.100	2.5	5.6	75000	16600	80000	17600
58BIC258	149.225	5.8750	0.025	0.0010	203.200	8.0000	0.030	0.0012	25.400	1.0000	0.25	0.010	2.5	0.100	2.8	6.1	78000	17300	81500	18000
60BIC258	152.400	6.0000	0.025	0.0010	203.200	8.0000	0.030	0.0012	25.400	1.0000	0.25	0.010	2.5	0.100	2.6	5.8	78000	17300	81500	18000
62BIC290	158.750	6.2500	0.025	0.0010	215.900	8.5000	0.030	0.0012	28.575	1.1250	0.25	0.010	3.0	0.120	3.5	7.7	104000	23200	106000	23600
65BIC298	165.100	6.5000	0.025	0.0010	222.250	8.7500	0.030	0.0012	28.575	1.1250	0.25	0.010	3.0	0.120	3.6	7.9	98000	22000	102000	22800
67BIC301	171.450	6.7500	0.025	0.0010	228.600	9.0000	0.030	0.0012	28.575	1.1250	0.25	0.010	3.0	0.120	3.7	8.2	104000	23200	104000	23600
70BIC309	177.800	7.0000	0.025	0.0010	241.300	9.5000	0.030	0.0012	31.750	1.2500	0.25	0.010	3.0	0.120	4.8	10.6	116000	26000	118000	26500
72BIC340	184.150	7.2500	0.030	0.0012	247.650	9.7500	0.030	0.0012	31.750	1.2500	0.31	0.012	3.0	0.120	4.9	10.8	122000	27500	122000	27000
75BIC348	190.500	7.5000	0.030	0.0012	254.000	10.0000	0.036	0.0014	31.750	1.2500	0.31	0.012	3.0	0.120	5.0	11.1	122000	27500	122000	27000
77BIC351	196.850	7.7500	0.030	0.0012	266.700	10.5000	0.036	0.0014	34.925	1.3750	0.31	0.012	3.0	0.120	6.3	13.9	146000	32500	143000	32500
80BIC359	203.200	8.0000	0.030	0.0012	273.050	10.7500	0.036	0.0014	34.925	1.3750	0.31	0.012	3.0	0.120	6.5	14.2	146000	32500	143000	32500
82BIC390	209.550	8.2500	0.030	0.0012	279.400	11.0000	0.036	0.0014	34.925	1.3750	0.31	0.012	3.0	0.120	6.6	14.6	153000	34500	150000	33500
85BIC391	215.900	8.5000	0.030	0.0012	292.100	11.5000	0.036	0.0014	38.100	1.5000	0.31	0.012	3.0	0.120	8.2	18.0	166000	37500	163000	36500
87BIC393	222.250	8.7500	0.030	0.0012	298.450	11.7500	0.036	0.0014	38.100	1.5000	0.31	0.012	3.0	0.120	8.4	18.5	176000	40000	170000	38000
90BIC401	228.600	9.0000	0.030	0.0012	304.800	12.0000	0.036	0.0014	38.100	1.5000	0.31	0.012	3.0	0.120	8.6	18.9	176000	40000	166000	37500
95BIC430	241.300	9.5000	0.030	0.0012	323.850	12.7500	0.041	0.0016	41.275	1.6250	0.36	0.014	4.0	0.160	10.6	23.4	200000	45000	190000	42500
100BIC439	254.000	10.0000	0.036	0.0014	336.550	13.2500	0.041	0.0016	41.275	1.6250	0.36	0.014	4.0	0.160	11.1	24.4	212000	47500	193000	43000
105BIC470	266.700	10.5000	0.036	0.0014	355.600	14.0000	0.041	0.0016	44.450	1.7500	0.36	0.014	4.0	0.160	13.5	29.8	255000	57000	224000	50000
110BIC479	279.400	11.0000	0.036	0.0014	368.300	14.5000	0.041	0.0016	44.450	1.7500	0.36	0.014	4.0	0.160	14.1	31.0	255000	57000	220000	50000
115BIC510	292.100	11.5000	0.036	0.0014	387.350	15.2500	0.041	0.0016	47.625	1.8750	0.36	0.014	5.0	0.200	16.9	37.2	280000	64000	240000	54000
120BIC519	304.800	12.0000	0.036	0.0014	406.400	16.0000	0.046	0.0018	50.800	2.0000	0.36	0.014	5.0	0.200	20.0	44.1	315000	71000	255000	58500
125BIC550	317.500	12.5000	0.041	0.0016	419.100	16.5000	0.046	0.0018	50.800	2.0000	0.41	0.016	5.0	0.200	20.7	45.7	325000	73500	265000	60000
135BIC580	342.900	13.5000	0.041	0.0016	457.200	18.0000	0.046	0.0018	57.150	2.2500	0.41	0.016	5.0	0.200	27.9	61.6	415000	93000	315000	71000
140BIC588	355.600	14.0000	0.041	0.0016	469.900	18.5000	0.046	0.0018	57.150	2.2500	0.41	0.016	5.0	0.200	28.8	63.4	415000	93000	310000	69500
145BIC610	368.300	14.5000	0.041	0.0016	495.300	19.5000	0.046	0.0018	63.500	2.5000	0.41	0.016	5.0	0.200	37.4	82.5	490000	110000	355000	80000
150BIC613	381.000	15.0000	0.041	0.0016	508.000	20.0000	0.051	0.0020	63.500	2.5000	0.41	0.016	5.0	0.200	38.5	84.8	490000	110000	355000	80000
155BIC615	393.700	15.5000	0.041	0.0016	520.700	20.5000	0.051	0.0020	63.500	2.5000	0.41	0.016	5.0	0.200	39.5	87.1	490000	110000	345000	78000
160BIC647	406.400	16.0000	0.046	0.0018	546.100	21.5000	0.051	0.0020	69.850	2.7500	0.46	0.018	5.0	0.200	48.8	107.6	585000	132000	400000	90000
165BIC660	419.100	16.5000	0.046	0.0018	558.800	22.0000	0.051	0.0020	69.850	2.7500	0.46	0.018	5.0	0.200	50.2	110.6	620000	137000	415000	93000
170BIC661	431.800	17.0000	0.046	0.0018	571.500	22.5000	0.051	0.0020	69.850	2.7500	0.46	0.018	5.0	0.200	51.4	113.3	620000	137000	415000	93000
175BIC680	444.500	17.5000	0.046	0.0018	596.900	23.5000	0.051	0.0020	76.200	3.0000	0.46	0.018	5.0	0.200	63.8	140.8	710000	160000	455000	102000
180BIC687	457.200	18.0000	0.046	0.0018	609.600	24.0000	0.051	0.0020	76.200	3.0000	0.46	0.018	5.0	0.200	65.3	144.0	710000	160000	455000	102000
185BIC695	469.900	18.5000	0.046	0.0018	622.300	24.5000	0.051	0.0020	76.200	3.0000	0.46	0.018	5.0	0.200	66.8	147.3	710000	160000	455000	102000
190BIC696	482.600	19.0000	0.046	0.0018	647.700	25.5000	0.076	0.0030	82.550	3.2500	0.46	0.018	5.0	0.200	80.7	177.9	800000	180000	500000	112000
195BIC710	495.300	19.5000	0.051	0.0020	660.400	26.0000	0.076	0.0030	82.550	3.2500	0.46	0.018	5.0	0.200	82.4	181.7	800000	180000	500000	112000
200BIC717	508.000	20.0000	0.051	0.0020	673.100	26.5000	0.076	0.0030	82.550	3.2500	0.51	0.020	5.0	0.200	84.3	185.9	850000	190000	510000	114000
205BIC725	520.700	20.5000	0.051	0.0020	698.500	27.5000	0.076	0.0030	88.900	3.5000	0.51	0.020	5.0	0.200	97.5	215.0	965000	216000	570000	129000
210BIC726	533.400	21.0000	0.051	0.0020	711.200	28.0000	0.076	0.0030	88.900	3.5000	0.51	0.020	5.0	0.200	99.7	219.8	1020000	228000	585000	132000

(1) Maximum shaft or housing fillet radius that bearing corners will clear.

(2) Based on 10^6 revolutions of calculated fatigue life.

BIH SERIES – MAXIMUM CAPACITY TYPE

- An inch-dimension series with extra large diameters.
- Maximum capacity design.
- Feature a counterbored outer ring to permit increased number of balls.
- Can carry thrust in one direction only, against the full shouldered side of the outer race.
- Compact sections for adaptability to applications where space is restricted.

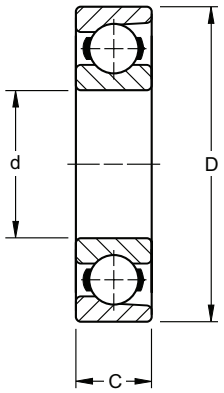

DIMENSIONS – TOLERANCES BIH SERIES

Bearing Number	Bore d		tolerance +0.000 mm +0.0000" to minus		Outside Diameter D		tolerance +0.000 mm +0.0000" to minus		Width C		tolerance +0.000 mm +0.0000" to minus		Fillet Radius(1)		Wt.		Static Load Rating C_o		Extended Dynamic Load Rating C_E(2)	
	mm	in.	mm	in.	mm	in.	mm	in.	mm	in.	mm	in.	mm	in.	kg	lbs.	N	lbs.	N	lbs.
41BIH196	104.775	4.1250	0.020	0.0008	152.400	6.0000	0.025	0.0010	22.23	0.8750	0.20	0.008	2.5	0.10	1.411	3.11	63000	14000	65500	14600
42BIH196	107.950	4.2500	0.020	0.0008	152.400	6.0000	0.025	0.0010	22.23	0.8750	0.20	0.008	2.5	0.10	1.321	2.91	71000	16000	72000	16300
43BIH206	111.125	4.3750	0.020	0.0008	158.750	6.2500	0.025	0.0010	22.23	0.8750	0.20	0.008	2.5	0.10	1.483	3.27	51000	11400	57000	12900
45BIH206	114.300	4.5000	0.020	0.0008	158.750	6.2500	0.025	0.0010	22.23	0.8750	0.20	0.008	2.5	0.10	1.383	3.05	75000	16600	73500	16600
46BIH216	117.475	4.6250	0.020	0.0008	165.100	6.5000	0.025	0.0010	22.23	0.8750	0.20	0.008	2.5	0.10	1.561	3.44	80000	18000	76500	17300
48BIH225	123.825	4.8750	0.025	0.0010	177.800	7.0000	0.025	0.0010	25.40	1.0000	0.25	0.010	2.5	0.10	2.209	4.87	104000	23200	100000	22400
50BIH225	127.000	5.0000	0.025	0.0010	177.800	7.0000	0.025	0.0010	25.40	1.0000	0.25	0.010	2.5	0.10	2.3	5.0	104000	23200	100000	22400
51BIH240	130.175	5.1250	0.025	0.0010	184.150	7.2500	0.030	0.0012	25.40	1.0000	0.25	0.010	2.5	0.10	2.5	5.5	108000	24000	102000	22800
52BIH240	133.350	5.2500	0.025	0.0010	184.150	7.2500	0.030	0.0012	25.40	1.0000	0.25	0.010	2.5	0.10	2.4	5.2	104000	23200	100000	22400
53BIH247	136.525	5.3750	0.025	0.0010	190.500	7.5000	0.030	0.0012	25.40	1.0000	0.25	0.010	2.5	0.10	2.6	5.7	112000	25000	104000	23200
55BIH247	139.700	5.5000	0.025	0.0010	190.500	7.5000	0.030	0.0012	25.40	1.0000	0.25	0.010	2.5	0.10	2.5	5.4	112000	25000	104000	23200
56BIH251	142.875	5.6250	0.025	0.0010	196.850	7.7500	0.030	0.0012	25.40	1.0000	0.25	0.010	2.5	0.10	2.7	5.9	116000	26000	106000	23600
57BIH251	146.050	5.7500	0.025	0.0010	196.850	7.7500	0.030	0.0012	25.40	1.0000	0.25	0.010	2.5	0.10	2.5	5.6	116000	26000	106000	23600
58BIH258	149.225	5.8750	0.025	0.0010	203.200	8.0000	0.030	0.0012	25.40	1.0000	0.25	0.010	2.5	0.10	2.8	6.1	118000	26500	108000	24000
60BIH258	152.400	6.0000	0.025	0.0010	203.200	8.0000	0.030	0.0012	25.40	1.0000	0.25	0.010	2.5	0.10	2.6	5.8	118000	26500	108000	24000
62BIH290	158.750	6.2500	0.025	0.0010	215.900	8.5000	0.030	0.0012	28.575	1.1250	0.25	0.010	3.0	0.12	3.5	7.7	146000	33500	134000	30000
65BIH298	165.100	6.5000	0.025	0.0010	222.250	8.7500	0.030	0.0012	28.575	1.1250	0.25	0.010	3.0	0.12	3.6	7.9	153000	34500	137000	30500
67BIH301	171.450	6.7500	0.025	0.0010	228.600	9.0000	0.030	0.0012	28.575	1.1250	0.25	0.010	3.0	0.12	3.7	8.2	160000	35500	137000	31000
70BIH309	177.800	7.0000	0.025	0.0010	241.300	9.5000	0.030	0.0012	31.750	1.2500	0.25	0.010	3.0	0.12	4.8	10.6	180000	40500	160000	35500
72BIH340	184.150	7.2500	0.030	0.0012	247.650	9.7500	0.030	0.0012	31.750	1.2500	0.31	0.012	3.0	0.12	4.9	10.8	186000	42500	160000	36000
75BIH348	190.500	7.5000	0.030	0.0012	254.000	10.0000	0.036	0.0014	31.750	1.2500	0.31	0.012	3.0	0.12	5.0	11.1	193000	43000	163000	36500
77BIH351	196.850	7.7500	0.030	0.0012	266.700	10.5000	0.036	0.0014	34.925	1.3750	0.31	0.012	3.0	0.12	6.3	13.9	228000	51000	193000	44000
80BIH359	203.200	8.0000	0.030	0.0012	273.050	10.7500	0.036	0.0014	34.925	1.3750	0.31	0.012	3.0	0.12	6.5	14.2	236000	53000	200000	45000
82BIH390	209.550	8.2500	0.030	0.0012	279.400	11.0000	0.036	0.0014	34.925	1.3750	0.31	0.012	3.0	0.12	6.6	10.6	245000	55000	200000	45500
85BIH391	215.900	8.5000	0.030	0.0012	292.100	11.5000	0.036	0.0014	38.100	1.5000	0.31	0.012	3.0	0.12	8.2	18.0	270000	61000	224000	50000
87BIH393	222.250	8.7500	0.030	0.0012	298.450	11.7500	0.036	0.0014	38.100	1.5000	0.31	0.012	3.0	0.12	8.4	18.5	270000	61000	224000	50000
90BIH401	228.600	9.0000	0.030	0.0012	304.800	12.0000	0.036	0.0014	38.100	1.5000	0.31	0.012	3.0	0.12	8.6	18.9	280000	63000	228000	51000
95BIH430	241.300	9.5000	0.030	0.0012	323.850	12.7500	0.036	0.0014	41.275	1.6250	0.36	0.014	4.0	0.16	10.6	23.4	315000	71000	255000	57000
100BIH439	254.00	10.0000	0.036	0.0014	336.550	13.2500	0.041	0.0016	41.275	1.6250	0.36	0.014	4.0	0.16	11.1	24.4	325000	73500	260000	58500
105BIH470	266.700	10.5000	0.036	0.0014	355.600	14.0000	0.041	0.0016	44.450	1.7500	0.36	0.014	4.0	0.16	13.5	29.8	400000	90000	300000	68000
110BIH479	279.400	11.0000	0.036	0.0014	368.300	14.5000	0.041	0.0016	44.450	1.7500	0.36	0.014	4.0	0.16	14.1	31.0	415000	93000	305000	69500
115BIH510	292.100	11.5000	0.036	0.0014	387.350	15.2500	0.041	0.0016	47.625	1.8750	0.36	0.014	5.0	0.20	16.9	37.2	465000	104000	335000	75000
120BIH519	304.800	12.0000	0.036	0.0014	406.400	16.0000	0.046	0.0018	50.800	2.0000	0.36	0.014	5.0	0.20	20.0	44.1	510000	116000	355000	80000
135BIH580	342.900	13.5000	0.041	0.0016	457.200	18.0000	0.046	0.0018	57.150	2.2500	0.41	0.016	5.0	0.20	27.9	61.6	655000	146000	425000	95000
140BIH588	355.600	14.0000	0.041	0.0016	469.900	18.5000	0.046	0.0018	57.150	2.2500	0.41	0.016	5.0	0.20	28.8	63.4	680000	150000	430000	96500

(1) Maximum shaft or housing fillet radius that bearing corners will clear.
(2) Based on 10^6 revolutions of calculated fatigue life.

EXTRA LARGE 100 SERIES

- Dimensions originally established to meet specific design requirements, before standard dimensions were established by the American Bearing Manufacturers Association (ABMA).
- A metric series.
- Available in the 100 Series (extra light).
- Available in a radially-fitted counterbore type, having a maximum complement of balls.
- Identified by the suffix "WI," these are designed to take thrust in one direction only.

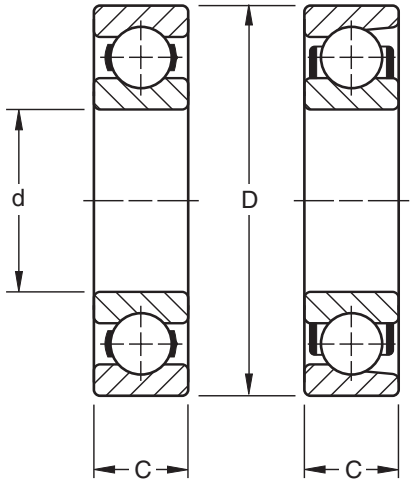

Filling-Slot Type Counterbore Type

DIMENSIONS – TOLERANCES

Bearing Number			Bore d				Outside Diameter D				Width C		Fillet Radius[1]		Wt.						Static Load Rating C_o		Extended Dynamic Load C_E[5]	
Filling-slot Type	Counter-bore Type	One Shield D			tolerance +0.000 mm +0.0000" to minus				tolerance +0.000 mm +0.0000" to minus		+0.00 mm -.25 mm +0.000" -.010"				Filling-slot Type		Counter-bore Type		Shielded Type					
			mm	in.	mm	in.	mm	in.	mm	in.	mm	in.	mm	in.	kg	lbs.	kg	lbs.	kg	lbs.	N	lbs.	N	lbs.
120W2	—	120WD2N	100	3.9370	0.020	0.0008	160	6.2992	0.025	0.0010	28	1.102[4]	2.01	0.079	2.041	4.50	—	—	2.041	4.50	75000	17000	106000	24000
122W	122WI	122WD2N[3]	110	4.3307	0.020	0.0008	175	6.8898	0.025	0.0010	30	1.181[4]	2.01	0.079	2.762	6.09	2.835	6.25	3.157	6.96	80000	18000	116000	26000
124W	124WI	124WD	120	4.7244	0.020	0.0008	190	7.4803	0.030	0.0012	32	1.260[4]	2.01	0.079	3.475	7.66	3.538	7.80	3.466	7.64	98000	22400	140000	31500
126W	126WI	126WD	130	5.1181	0.025	0.0010	205	8.0709	0.030	0.0012	34	1.339	2.01	0.079	4.336	9.56	4.318	9.52	4.332	9.55	110000	24500	146000	33500
128W	128WI	128WD	140	5.5118	0.025	0.0010	220	8.6614	0.030	0.0012	36	1.417	2.01	0.079	5.239	11.55	5.244	11.56	5.294	11.67	122000	27000	163000	36500
130W	—	130WD	150	5.9055	0.025	0.0010	235	9.2520	0.030	0.0012	38	1.496	2.01	0.079	6.278	13.84	—	—	6.437	14.19	140000	31500	183000	41500
132W	—	132WD	160	6.2992	0.025	0.0010	250	9.8425	0.030	0.0012	40	1.575	2.49	0.098	7.394	16.30	—	—	7.484	16.50	160000	35500	208000	46500
134W	—	—	170	6.6929	0.025	0.0010	265	10.4331	0.035	0.0014	42	1.654	2.49	0.098	9.049	19.95	—	—	—	—	180000	40000	224000	51000
—	—	136WD2N	180	7.0866	0.025	0.0010	280	11.0236	0.035	0.0014	49	1.929	2.49	0.098	—	—	—	—	11.004	24.26	200000	45000	245000	55000
138W	—	—	190	7.4803	0.03	0.0120	300	11.8110	0.035	0.0014	46	1.811[2]	2.49	0.098	12.928	28.50	—	—	—	—	245000	56000	285000	64000

[1] Maximum shaft or housing fillet radius that bearing corners will clear.
[2] +.00 mm, -25 mm (+000", -.010").
[3] 35 mm width.
[4] Width tolerance is +.00 mm, -.20 mm (+.000", -.008").
[5] Based on 10^6 revolutions of calculated fatigue life.

7000WN PRODUCT FAMILY

INTRODUCTION

The high performance 7000WN Angular Contact Product Family is specifically designed to support heavy thrust loads at lower operating temperatures at high speeds. Included in the angular contact series are the following design features:

- Refined bore diameter tolerance
- Increased thrust capacity
- Extended load capacity
- Lower operating temperatures
- Better than ABEC 1 bore diameter tolerances
- High operating contact angle
- Improved ball section ratio
- Low shoulder inner and outer rings improve oil flow

A feature of this series is the refined bore diameter tolerance. The closer bore tolerance in the WN product family reduces the broad range of interference and thus prevents the development of undesirable high preload in mounted duplex pairs. As a result, longer bearing life is achieved and high operating temperatures are avoided.

This product family can support heavy thrust loads by combining high shoulders on the thrust side of both rings with a high operating angle. In addition, uniformity of load per ball under combined loads is more favorable with a high contact angle and results in longer bearing life.

Maximum clearance between the one-piece brass or bronze cage and the land diameters of both rings is achieved in the WN construction. Utilizing low shoulder diameters on the non-thrust sides of inner and outer rings promotes efficient oil passage through the bearing resulting in lower operating temperatures and longer bearing life.

The 7000WN Product Family is divided into several designs. Sizes 7207-7218WN and 7304-7318WN have a 40 degree contact angle and a one-piece, ball-piloted, pressed brass cage. Sizes 7219-7230WN and 7319-7330WN have a 40 degree contact angle and a one-piece, outer ring-piloted, high-strength machined bronze cage. The 7412WN and 7415WN both have a 40 degree contact angle and a one-piece conical, high-strength machined bronze cage.

The 7000WN Product Family is available as single bearings and duplex sets. A single with the suffix "SU" is flush ground on both faces for universal mounting. Such bearings can be used as singles or duplex mounted back-to-back (DB), face-to-face (DF) or tandem (DT), depending on the functional requirements of the design. The mounting of duplex "SU" bearings will result in a preload range of minimum internal clearance to a solid preload.

Bearings without the "SU" designation are not flush ground and are intended to be used as singles. These bearings are used to support thrust from one direction and are often accompanied by a preload spring.

Bearings with the suffix "DU" are flush ground on both faces for universal mounting. A duplex pair of "DU" bearings can be mounted (DB, DF, or DT), depending on the functional requirements of the design. These bearings, after mounting, will result in a range of positive light preload.

APPLICATIONS

These design features are advantageous in applications such as oil refining pump systems where higher productivity and longer system life is important. Other applications where these features are equally suited are deep well pump motors, vertical and horizontal pumps, worm gear and right angle drives, spindles, live centers and gearboxes. For applications requiring a high degree of axial and radial rigidity, these bearings are suggested in preloaded duplex mountings.

MOUNTING

Although each 7000WN Product Family bearing is a self-contained unit, the construction is such that they are frequently mounted as two bearings opposed, so that thrust can be carried in either direction.

Unlike the radial type, the angular contact bearing, when mounted alone, requires adjustment and must be installed with care. As the bearing is relatively loose axially before mounting, it is important that the design incorporate some means to move the outer ring axially into its correct position relative to the inner ring. This adjustment should be made when the bearing is mounted. A common method is to place a preload spring or shims at one bearing location.

The correct adjustment of the single bearing is obtained when the initial axial looseness of the assembly is removed. This eliminates the possibility of premature bearing damage due to excessive preloading or looseness through improper adjustment.

Bearings designated "SU" are ground on both surfaces to permit universal mounting. These duplex sets are ideally suited for applications which involve a combination of radial loads from either direction. "SU" bearings are flush ground so that under a specific axial gage load the inner ring will protrude beyond the face of the outer ring. This design results in an internal axial clearance within the bearing pair that helps to minimize build-up of excessive preload within the bearings when mounted on a shaft with maximum interference.

To assure correct mounting of bearings in the 7000WN Product Family, the word THRUST is marked on the thrust face of both the inner and outer rings. This face should abut against the housing shoulder or the end cover, depending on the required direction of "thrust".

ORDERING INFORMATION

"SU" Suffix: All bearings are packaged singly.
To obtain a pair of SU flush ground bearings for duplex mounting, specify two bearings.
Example: (2) 7210WN SU bearings.

"DU" Suffix: All bearings are packaged as a pair in a single box.
To obtain a pair of DU flush ground bearings for duplex mounting, specify one pair.
Example: one pair-7219WN MBR-DU.

No Suffix: All bearings are packaged singly.
No other designation is required to obtain

MOUNTING ARRANGEMENTS

Duplex- DB
Back-to-Back

Duplex- DF
Face-to-Face

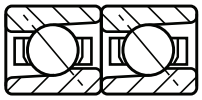
Duplex- DT Tandem

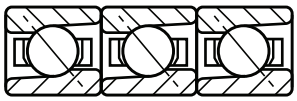
Three Bearings in Tandem

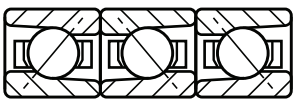
Two in Tandem Opposed
with a Single Bearing

LIGHT 7200WN SERIES

- Dimensionally interchangeable with the radial 200 Series.
- 7000WN Product Family includes a refined bore diameter.
- A single bearing is suggested for applications in which the thrust load is in one direction or, in the case of combined loads, the thrust load is high in relation to the radial load.
- A duplex pair is suggested for applications where thrust is present in both directions or where axial displacement of the shaft must be restricted.
- For exceptionally high thrust loads in one direction, a tandem pair can be used, opposed by a third bearing.
- Sizes 7201K through 7203WN have a 20 degree contact angle and a nylon cage.
- Sizes 7204WN through 7218WN have a 40 degree contact angle and a one-piece, ball-piloted, pressed brass cage.
- Larger sizes 7219WN through 7230WN have a 40 degree contact angle and a one-piece, outer ring piloted high-strength machined bronze cage.

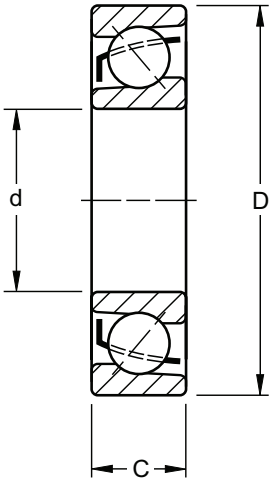

7207-7218WN
40° Contact Angle

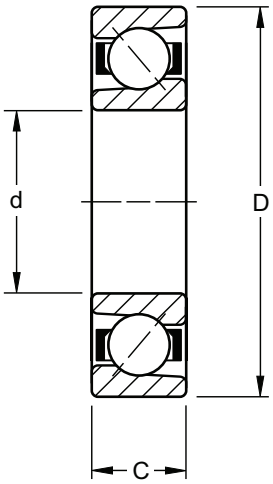

7219-7230WN MBR
40° Contact Angle

DIMENSIONS – TOLERANCES

Bearing Number	Bore d		tolerance +0.000 mm +0.0000" to minus		Outside Diameter D		tolerance +0.000 mm +0.0000" to minus		Width C		tolerance +0.000 mm +0.0000" to minus		Fillet Radius(1)		Wt.		Static Load Rating C_o		Extended Dynamic Load Rating C_E(4)	
	mm	in.	mm	in.	mm	in.	mm	in.	mm	in.	mm	in.	mm	in.	kg	lbs.	N	lbs.	N	lbs.
7201K	12	0.4724	0.008	0.0003	32	1.2598	0.011	0.00043	10	0.3937	0.12	0.005	0.6	0.024	0.036	0.08	2790	630	7100	1600
7202W	15	0.5906	0.008	0.0003	35	1.3780	0.011	0.00043	11	0.4331	0.12	0.005	0.6	0.024	0.045	0.10	4700	1060	10300	2320
7203W	17	0.6693	0.008	0.0003	40	1.5748	0.011	0.00043	12	0.4727	0.12	0.005	0.6	0.024	0.068	0.15	6930	1560	14200	3200
7204WN(2)(3)	20	0.7874	0.010	0.0004	47	1.8504	0.011	0.00043	14	0.5512	0.12	0.005	1.0	0.039	0.104	0.23	8100	1830	16800	3800
7205WN(3)	25	0.9843	0.010	0.0004	52	2.0472	0.013	0.0005	15	0.5906	0.12	0.005	1.0	0.039	0.132	0.29	9400	2120	16600	3750
7206WN	30	1.1811	0.010	0.0004	62	2.4409	0.013	0.0005	16	0.6299	0.12	0.005	1.0	0.039	0.209	0.46	13500	3050	23000	5200
7207WN	35	1.3780	0.010	0.0004	72	2.8346	0.013	0.0005	17	0.6693	0.12	0.005	1.0	0.039	0.286	0.63	18000	4150	30800	6950
7208WN	40	1.5748	0.010	0.0004	80	3.1496	0.013	0.0005	18	0.7087	0.12	0.005	1.0	0.039	0.331	0.73	23000	5200	36000	8150
7209WN	45	1.7717	0.010	0.0004	85	3.3465	0.015	0.0006	19	0.7480	0.12	0.005	1.0	0.039	0.435	0.96	25900	5850	40500	9150
7210WN	50	1.9685	0.010	0.0004	90	3.5433	0.015	0.0006	20	0.7874	0.12	0.005	1.0	0.039	0.508	1.12	28400	6400	42500	9500
7211WN	55	2.1654	0.010	0.0004	100	3.9370	0.015	0.0006	21	0.8268	0.15	0.006	1.5	0.059	0.635	1.40	36200	8150	52000	11800
7212WN	60	2.3622	0.010	0.0004	110	4.3307	0.015	0.0006	22	0.8661	0.15	0.006	1.5	0.059	0.835	1.84	44000	10000	63000	14300
7213WN	65	2.5591	0.010	0.0004	120	4.7244	0.015	0.0006	23	0.9055	0.15	0.006	1.5	0.059	1.061	2.34	52400	11800	72400	16300
7214WN	70	2.7559	0.010	0.0004	125	4.9213	0.018	0.0007	24	0.9449	0.15	0.006	1.5	0.059	1.171	2.58	57300	12900	78000	17600
7215WN	75	2.9528	0.010	0.0004	130	5.1181	0.018	0.0007	25	0.9843	0.15	0.006	1.5	0.059	1.271	2.80	58000	13200	78000	17600
7216WN	80	3.1496	0.010	0.0004	140	5.5118	0.018	0.0007	26	1.0236	0.15	0.006	2.0	0.079	1.483	3.27	65500	15600	91500	20400
7217WN	85	3.3465	0.013	0.0005	150	5.9055	0.018	0.0007	28	1.1024	0.20	0.008	2.0	0.079	2.096	4.62	76500	18300	106000	23600
7218WN	90	3.5433	0.013	0.0005	160	6.2992	0.025	0.0010	30	1.1811	0.20	0.008	2.0	0.079	2.567	5.66	88000	21200	119000	27000
7219WN MBR	95	3.7402	0.013	0.0005	170	6.6929	0.025	0.0010	32	1.2600	0.20	0.008	2.0	0.079	3.025	6.67	93000	22800	133000	30000
7220WN MBR	100	3.9370	0.013	0.0005	180	7.0866	0.025	0.0010	34	1.3390	0.20	0.008	2.0	0.079	3.460	7.62	106000	25500	146000	33500
7222WN MBR	110	4.3307	0.013	0.0005	200	7.8740	0.030	0.0012	38	1.4960	0.20	0.008	2.0	0.079	5.162	11.38	134000	32500	173000	39000
7224WN MBR	120	4.7244	0.013	0.0005	215	8.4646	0.030	0.0012	40	1.5750	0.20	0.008	2.0	0.079	6.354	14.01	160000	36500	188000	42500
7226WN MBR	130	5.1181	0.018	0.0007	230	9.0551	0.030	0.0012	40	1.5750	0.25	0.010	2.5	0.098	7.543	16.63	176000	43000	211000	47500
7228WN MBR	140	5.5118	0.018	0.0007	250	9.8425	0.030	0.0012	42	1.6540	0.25	0.010	2.5	0.098	9.634	21.24	200000	47500	224000	50000
7230WN MBR	150	5.9055	0.018	0.0007	270	10.6299	0.035	0.0014	45	1.7720	0.25	0.010	2.5	0.098	11.731	25.84	240000	56000	248000	56000

(1) Maximum shaft or housing fillet radius that bearing corners will clear.
(2) Also available as W design.
(3) Also available with 20° contact angle and nylon cage.
(4) Based on 10^6 revolutions of calculated fatigue life.

Note: 7208WN-7212WN also available with a one-piece, high-strength machined bronze retainer (MBR). This cage can be quoted on the other sizes by request.

MEDIUM 7300WN SERIES

- Dimensionally interchangeable with the radial 300 Series.
- The 7000WN Product Family includes a refined bore diameter. The 7300WN Series can sustain heavier thrust and combined loads than the 7200WN Series.
- A single bearing is suggested for applications in which the thrust load is in one direction or, in the case of combined loads, the thrust load is high in relation to the radial load.
- A duplex pair is suggested for applications where thrust is present in both directions or where axial displacement of the shaft must be restricted.
- For exceptionally high thrust loads in one direction, a tandem pair can be used, opposed by a third bearing.
- Size 7303W has a 20 degree contact angle and a steel cage.
- Sizes 7304WN through 7318WN have a 40 degree contact angle and a one-piece, ball-piloted, pressed brass cage.
- Larger sizes 7319WN through 7330WN have a 40 degree contact angle and a one-piece, outer ring piloted high-strength machined bronze cage.
- Sizes 7306WN to 7318WN also available with a one-piece, high-strength, machined bronze retainer.

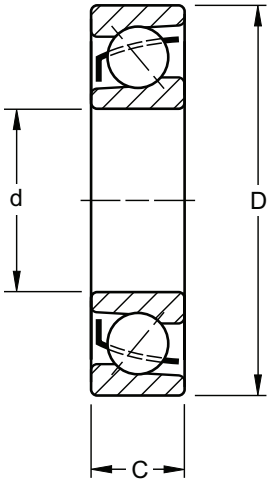

7304-7318WN
40° Contact Angle

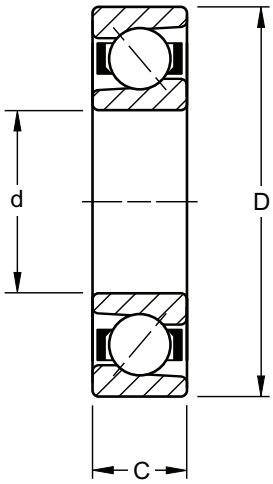

7319-7330WN MBR
40° Contact Angle

DIMENSIONS – TOLERANCES

Bearing Number	Bore d tolerance +0.000 mm +0.0000" to minus				Outside Diameter D tolerance +0.000 mm +0.0000" to minus				Width C tolerance +0.000 mm +0.0000" to minus				Fillet Radius[1]		Wt.		Static Load Rating C_o		Extended Dynamic Load Rating C_E[2]	
	mm	in.	mm	in.	mm	in.	mm	in.	mm	in.	mm	in.	mm	in.	kg	lbs.	N	lbs.	N	lbs.
7303W	17	0.6693	0.008	0.0003	47	1.8504	0.011	0.00045	14	0.5512	0.12	0.005	1.0	0.039	0.118	0.26	9200	2080	20200	4550
7304WN	20	0.7874	0.010	0.0004	52	2.0472	0.013	0.0005	15	0.5906	0.12	0.005	1.0	0.039	0.150	0.33	9590	2160	19500	4400
7305WN	25	0.9843	0.010	0.0004	62	2.4409	0.013	0.0005	17	0.6693	0.12	0.005	1.0	0.039	0.241	0.53	13300	3000	26500	5850
7306WN	30	1.1811	0.010	0.0004	72	2.8346	0.013	0.0005	19	0.7480	0.12	0.005	1.0	0.039	0.363	0.80	20800	4650	34600	7800
7307WN	35	1.3780	0.010	0.0004	80	3.1496	0.013	0.0005	21	0.8268	0.12	0.005	1.5	0.059	0.408	0.90	23900	5400	41300	9300
7308WN	40	1.5748	0.010	0.0004	90	3.5433	0.015	0.0006	23	0.9055	0.12	0.005	1.5	0.059	0.667	1.47	30200	6800	50600	11400
7309WN	45	1.7717	0.010	0.0004	100	3.9370	0.015	0.0006	25	0.9843	0.12	0.005	1.5	0.059	0.885	1.95	39900	9000	66600	15000
7310WN	50	1.9685	0.010	0.0004	110	4.3307	0.015	0.0006	27	1.0630	0.12	0.005	2.0	0.079	1.139	2.51	47900	10800	76800	17300
7311WN	55	2.1654	0.010	0.0004	120	4.7244	0.015	0.0006	29	1.1417	0.15	0.006	2.0	0.079	1.592	3.51	56400	12700	88800	20000
7312WN	60	2.3622	0.010	0.0004	130	5.1181	0.018	0.0007	31	1.2205	0.15	0.006	2.0	0.079	1.969	4.34	64800	14600	101000	22800
7313WN	65	2.5591	0.010	0.0004	140	5.5118	0.018	0.0007	33	1.2992	0.15	0.006	2.0	0.079	2.477	5.46	75500	17000	115000	26000
7314WN	70	2.7559	0.010	0.0004	150	5.9055	0.018	0.0007	35	1.3780	0.15	0.006	2.0	0.079	2.676	5.90	85700	19300	128000	29000
7315WN	75	2.9528	0.010	0.0004	160	6.2992	0.025	0.0010	37	1.4567	0.15	0.006	2.0	0.079	3.452	7.61	98000	22000	142000	32000
7316WN	80	3.1496	0.010	0.0004	170	6.6929	0.025	0.0010	39	1.5354	0.15	0.006	2.0	0.079	4.504	9.92	108000	24500	153000	34500
7317WN	85	3.3465	0.013	0.0005	180	7.0866	0.025	0.0010	41	1.6124	0.20	0.008	2.5	0.098	4.940	10.88	122000	27500	166000	37500
7318WN	90	3.5433	0.013	0.0005	190	7.4803	0.030	0.0012	43	1.6929	0.20	0.008	2.5	0.098	6.247	13.76	135000	30500	177000	40000
7319WN MBR	95	3.7402	0.013	0.0005	200	7.8740	0.030	0.0012	45	1.7717	0.20	0.008	2.5	0.098	6.706	14.77	148000	33500	191000	43000
7320WN MBR	100	3.9370	0.013	0.0005	215	8.4646	0.030	0.0012	47	1.8504	0.20	0.008	2.5	0.098	8.227	18.12	177000	40000	217000	49000
7321WN MBR	105	4.1339	0.013	0.0005	225	8.8583	0.030	0.0012	49	1.9291	0.20	0.008	2.5	0.098	9.498	20.92	191000	43000	226000	51000
7322WN MBR	110	4.3307	0.013	0.0005	240	9.4488	0.030	0.0012	50	1.9685	0.20	0.008	2.5	0.098	10.892	23.99	226000	51000	253000	57000
7324WN MBR	120	4.7244	0.013	0.0005	260	10.2362	0.035	0.0014	55	2.1654	0.20	0.008	2.5	0.098	14.356	31.62	259000	58500	284000	64000
7326WN MBR	130	5.1181	0.018	0.0007	280	11.0236	0.035	0.0014	58	2.2835	0.25	0.010	3.0	0.118	17.339	38.19	302000	68000	315000	71000
7328WN MBR	140	5.5118	0.018	0.0007	300	11.8110	0.035	0.0014	62	2.4409	0.25	0.010	3.0	0.118	20.294	44.70	346000	78000	339000	76500
7330WN MBR	150	5.9055	0.018	0.0007	320	12.5984	0.040	0.0016	65	2.5591	0.25	0.010	3.0	0.118	24.907	54.86	390000	88000	368000	83000

(1) Maximum shaft or housing fillet radius that bearing corners will clear.
(2) Based on 10^6 revolutions of calculated fatigue life.

HEAVY 7400 SERIES

- Dimensionally interchangeable with the radial 400 Series.
- Sizes with a "WN" suffix include a refined bore diameter tolerance.
- Can sustain heavier thrust and combined loads than the 7300WN Series.
- A single bearing is suggested for applications in which the thrust load is in one direction or, in the case of combined loads, the thrust load is high in relation to the radial load.
- A duplex pair is suggested for applications where thrust is present in both directions or where axial displacement of the shaft must be restricted.
- For exceptionally high thrust loads in one direction, a tandem pair can be used, opposed by a third bearing.
- Sizes with a suffix "W" have a 20 degree contact angle and a steel retainer.
- Sizes with a suffix "PW" have a 35 degree contact angle and a steel retainer.
- Sizes with a "WN" suffix have a 40 degree contact angle and a one-piece, high-strength machined bronze cage.

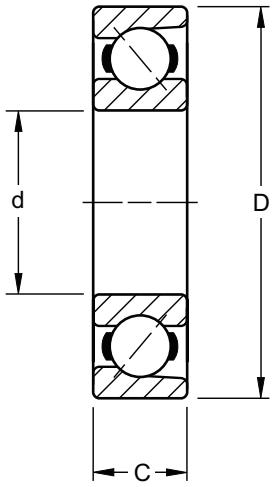

7405W-7409W
20° Contact Angle

7410PW-7420PW
35° Contact Angle

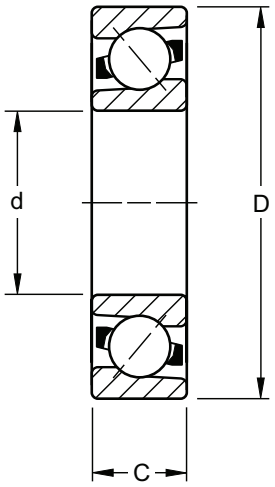

7412WN and 7415WN MBR
40° Contact Angle

DIMENSIONS – TOLERANCES

Bearing Number	Bore d tolerance +0.000 mm +0.0000" to minus				Outside Diameter D tolerance +0.000 mm +0.0000" to minus				Width C tolerance +0.000 mm +0.0000" to minus				Fillet Radius(1)		Wt.		Static Load Rating C_0		Extended Dynamic Load Rating C_E(2)	
	mm	in.	mm	in.	mm	in.	mm	in.	mm	in.	mm	in.	mm	in.	kg	lbs.	N	lbs.	N	lbs.
7405W	25	0.9843	0.010	0.0004	80	3.1496	0.013	0.0005	21	0.8268	0.12	0.005	1.5	0.060	0.925	2.04	25900	5850	53300	12000
7406W	30	1.1811	0.010	0.0004	90	3.5433	0.015	0.0006	23	0.9055	0.12	0.005	1.5	0.060	0.957	2.11	35500	8000	69000	15600
7407W	35	1.3780	0.012	0.00045	100	3.9370	0.015	0.0006	25	0.9843	0.12	0.005	1.5	0.060	1.002	2.21	42800	9650	79900	18000
7408W	40	1.5748	0.012	0.00045	110	4.3307	0.015	0.0006	27	1.0630	0.12	0.005	2.0	0.080	1.311	2.89	56400	12700	99500	22400
7409W	45	1.7717	0.012	0.00045	120	4.7244	0.015	0.0006	29	1.1417	0.12	0.005	2.0	0.080	1.647	3.63	62000	14000	106000	24000
7410WN	50	1.9685	0.012	0.00045	130	5.1181	0.018	0.0007	31	1.2205	0.12	0.005	2.0	0.080	2.195	4.84	66600	15000	115000	26000
7411PW	55	2.1654	0.015	0.0006	140	5.5118	0.018	0.0007	33	1.2992	0.15	0.006	2.0	0.080	2.681	5.91	71000	16000	122000	27500
7412WN	60	2.3622	0.010	0.0004	150	5.9055	0.018	0.0007	35	1.3780	0.15	0.006	2.0	0.080	3.257	7.18	85700	19300	135000	30500
7413WN	65	2.5591	0.015	0.0006	160	6.2992	0.025	0.0010	37	1.4567	0.15	0.006	2.0	0.080	3.896	8.59	91500	20400	142000	32000
7414WN	70	2.7559	0.015	0.0006	180	7.0866	0.025	0.0010	42	1.6535	0.15	0.006	2.5	0.100	5.688	12.54	115500	26000	173000	39000
7415WN	75	2.9528	0.010	0.0004	190	7.4803	0.030	0.0012	45	1.7717	0.15	0.006	2.5	0.100	6.745	14.87	148000	33500	202000	45500
7416WN	80	3.1496	0.015	0.0006	200	7.8740	0.030	0.0012	48	1.8898	0.15	0.006	2.5	0.100	7.747	17.08	153000	34500	206000	46500
7418PW	90	3.5433	0.020	0.0008	225	8.8583	0.030	0.0012	54	2.1268	0.20	0.008	3.0	0.120	11.159	24.60	200000	45000	236000	53000
7420PW	100	3.9370	0.020	0.0008	265	10.4331	0.036	0.0014	60	2.3622	0.20	0.008	3.0	0.120	18.643	41.10	279000	63000	315000	71000

(1) Maximum shaft or housing fillet radius that bearing corners will clear.
(2) Based on 10^6 revolutions of calculated fatigue life.

LIGHT 5200 SERIES

- Features the same bores and outside diameters as the corresponding bearings in the 200 Series single-row radial type.
- Double-row angular contact ball bearings meet the demand for increased axial and radial rigidity in applications where the design limits space.
- Available in both Conrad and maximum capacity types.
- Suffix "K" denotes Conrad (example: 5203K).
- Suffix "W" or no suffix denotes maximum capacity type (example: 5212W, 5213).
- Please note: these double-row series bearings are not prelubricated.

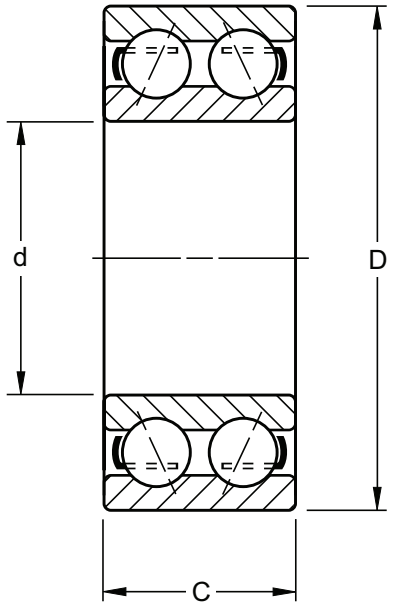

DIMENSIONS – TOLERANCES

Bearing Number	Bore d tolerance +0.000 mm +0.0000" to minus				Outside Diameter D tolerance +0.000 mm +0.0000" to minus				Width C +0.00 mm, -0.12 mm +0.000", -0.005"			Fillet Radius[1]		Contact Angle	Wt.		Static Load Rating C_o		Extended Dynamic Load Rating C_E[6]	
	mm	in.	mm	in.	mm	in.	mm	in.	mm	in.	in.	mm	in.		kg	lbs.	N	lbs.	N	lbs.
5200K[2]	10	0.3937	0.008	0.0003	30	1.1811	0.009	0.00035	14.27	0.562	9/16	0.6	0.024	20°	0.054	0.12	5060	1140	10600	2400
5201K[2]	12	0.4724	0.008	0.0003	32	1.2598	0.012	0.00045	15.88	0.625	5/8	0.6	0.024	20°	0.068	0.15	4700	1060	9060	2040
5202K[2]	15	0.5906	0.008	0.0003	35	1.3780	0.012	0.00045	15.88	0.625	5/8	0.6	0.024	20°	0.073	0.16	7100	1600	13500	3050
5203K[2]	17	0.6693	0.008	0.0003	40	1.5748	0.012	0.00045	17.48	0.688	11/16	0.6	0.024	20°	0.104	0.23	9200	2080	16800	3800
5204K[2]	20	0.7874	0.010	0.0004	47	1.8504	0.012	0.00045	20.62	0.812	13/16	1.0	0.039	20°	0.163	0.36	12600	2850	22600	5100
5205K[2]	25	0.9843	0.010	0.0004	52	2.0472	0.013	0.0005	20.62	0.812	13/16	1.0	0.039	20°	0.186	0.41	15100	3400	24800	5600
5206K	30	1.1811	0.010	0.0004	62	2.4409	0.013	0.0005	23.83	0.938	15/16	1.0	0.039	20°	0.295	0.65	21700	4900	34600	7800
5206W	30	1.1811	0.010	0.0004	62	2.4409	0.013	0.0005	23.83	0.938	15/16	1.0	0.039	30°	0.295	0.65	27000	6100	39000	8800
5207K	35	1.3780	0.012	0.00047	72	2.8346	0.013	0.0005	26.97	1.062	1 1/16	1.0	0.039	20°	0.481	1.06	29000	6550	45000	10200
5207W	35	1.3780	0.012	0.00047	72	2.8346	0.013	0.0005	26.97	1.062	1 1/16	1.0	0.039	30°	0.481	1.06	36800	8300	51500	11600
5208K	40	1.5748	0.012	0.00047	80	3.1496	0.013	0.0005	30.17	1.188	1 3/16	1.0	0.039	20°	0.566	1.32	33900	7650	51500	11600
5208W	40	1.5748	0.012	0.00047	80	3.1496	0.013	0.0005	30.17	1.188	1 3/16	1.0	0.039	30°	0.599	1.32	47000	10600	62000	14000
5209K	45	1.7717	0.012	0.00047	85	3.3456	0.015	0.0006	30.17	1.188	1 3/16	1.0	0.039	20°	0.699	1.54	39000	8800	57000	12900
5209W	45	1.7717	0.012	0.00047	85	3.3456	0.015	0.0006	30.17	1.188	1 3/16	1.0	0.039	30°	0.699	1.54	51500	11600	64800	14600
5210K	50	1.9685	0.012	0.00047	90	3.5433	0.015	0.0006	30.17	1.188	1 3/16	1.0	0.039	20°	0.753	1.66	44400	10000	62000	14000
5210W	50	1.9685	0.012	0.00047	90	3.5433	0.015	0.0006	30.17	1.188	1 3/16	1.0	0.039	30°	0.753	1.66	56000	12700	66600	15000
5211K	55	2.1654	0.015	0.0006	100	3.9370	0.015	0.0006	33.32	1.312[4]	1 5/16	1.5	0.059	20°	1.039	2.29	71000	12700	76000	17300
5211W	55	2.1654	0.015	0.0006	100	3.9370	0.015	0.0006	33.32	1.312[4]	1 5/16	1.5	0.059	30°	1.039	2.29	62000	16000	84000	19000
5212K	60	2.3622	0.015	0.0006	110	4.3307	0.015	0.0006	36.53	1.438[4]	1 7/16	1.5	0.059	20°	1.388	3.06	88800	14000	85000	19300
5212W	60	2.3622	0.015	0.0006	110	4.3307	0.015	0.0006	36.53	1.438[4]	1 7/16	1.5	0.059	30°	1.388	3.06	72000	20000	103000	23800
5213K	65	2.5591	0.015	0.0006	120	4.7244	0.015	0.0006	38.10	1.500[4]	1 1/2	1.5	0.059	20°	1.923	4.24	76800	17300	101000	22800
5213[3]	65	2.5591	0.015	0.0006	120	4.7244	0.015	0.0006	38.10	1.500[4]	1 1/2	1.5	0.059	30°	1.923	4.24	92000	20800	99500	22400
5214K	70	2.7559	0.015	0.0006	125	4.9213	0.018	0.0007	39.67	1.562[4]	1 9/16	1.5	0.059	20°	2.096	4.62	84000	19000	108000	24500
5214[3]	70	2.7559	0.015	0.0006	125	4.9213	0.018	0.0007	39.67	1.562[4]	1 9/16	1.5	0.059	30°	2.096	4.62	126000	28500	139000	31500
5215K	75	2.9528	0.015	0.0006	130	5.1181	0.018	0.0007	41.28	1.625[4]	1 5/8	1.5	0.059	20°	2.336	5.15	85700	19300	108000	24500
5215[3]	75	2.9528	0.015	0.0006	130	5.1181	0.018	0.0007	41.28	1.625[4]	1 5/8	1.5	0.059	30°	2.336	5.15	137000	31000	144000	32500
5216[3]	80	3.1496	0.015	0.0006	140	5.5118	0.018	0.0007	44.45	1.750[4]	1 3/4	2.0	0.079	30°	2.867	6.32	162000	36500	168000	38000
5217[3]	85	3.3465	0.020	0.0008	150	5.9055	0.018	0.0007	49.23	1.938[5]	1 15/16	2.0	0.079	30°	3.629	8.00	177000	40000	188000	42500
5218W	90	3.5433	0.020	0.0008	160	6.2992	0.025	0.0010	52.37	2.062[5]	2 1/16	2.0	0.079	20°	4.518	9.96	191000	43000	202000	45500
5219[3]	95	3.7402	0.020	0.0008	170	6.6929	0.025	0.0010	55.58	2.188[5]	2 3/16	2.0	0.079	30°	5.411	11.93	235000	53000	244000	55000
5220W	100	3.9370	0.020	0.0008	180	7.0866	0.025	0.0010	60.32	2.375[5]	2 3/8	2.0	0.079	20°	6.541	14.42	253000	57000	259000	58500
5221W	105	4.1339	0.020	0.0008	190	7.4803	0.030	0.0012	65.10	2.563[5]	2 9/16	2.0	0.079	20°	7.537	16.60	301000	67600	300000	67500
5222[3]	110	4.3307	0.020	0.0008	200	7.8740	0.030	0.0012	69.85	2.750[5]	2 3/4	2.0	0.079	30°	9.503	20.95	339000	76500	326000	73500

[1] Maximum shaft or housing fillet radius that bearing corners will clear.
[2] Sizes have PRB molded nylon retainers.
[3] These sizes have contact angle converging inside the bearing.
[4] Width tolerance is +.00 mm to -.15 mm (+.000 to -.006").
[5] Width tolerance is +.00 mm to -.20 mm (+.000 to -.008").
[6] Based on 10^6 revolutions of calculated fatigue life.

Note: See page D45 for Shield and Snap Ring Combinations.

MEDIUM 5300 SERIES

- Features the same bores and outside diameters as corresponding bearings in the 300 Series single-row radial type.
- Double-row angular contact ball bearings meet the demand for increased axial and radial rigidity in applications where design limits space.
- Available in Conrad and maximum capacity types.
- Suffix “K” denotes Conrad type (example: 5303K).
- Suffix “W” or no suffix denotes maximum capacity type (examples: 5312W, 5319).
- Please note that these double-row series bearings are not prelubricated.

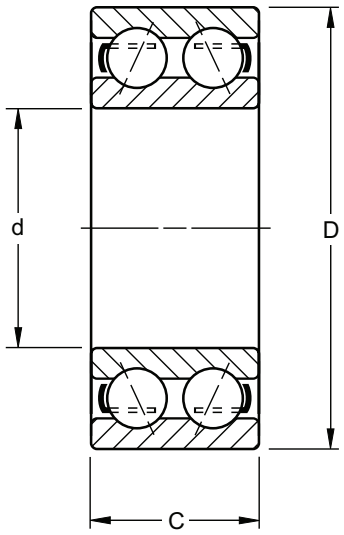

DIMENSIONS – TOLERANCES

Bearing Number	Bore d tolerance +0.000 mm +0.0000" to minus				Outside Diameter D tolerance +0.000 mm +0.0000" to minus				Width C +0.00 mm, -0.12 mm +0.000", -0.005"			Fillet Radius(1)		Contact Angle	Wt.		Static Load Rating C_0		Extended Dynamic Load Rating C_E(6)	
	mm	in.	mm	in.	mm	in.	mm	in.	mm	in.	in.	mm	in.		kg	lbs.	N	lbs.	N	lbs.
5302	15	0.5906	0.008	0.0003	42	1.6535	0.012	0.00045	19.05	0.75	3/4	1.0	0.039	20°	0.141	0.31	9200	2080	16800	3800
5303K	17	0.6693	0.008	0.0003	47	1.8504	0.012	0.00045	22.22	0.875	7/8	1.0	0.039	20°	0.191	0.42	12600	2850	22600	5100
5304K(2)	20	0.7874	0.010	0.0004	52	2.0472	0.013	0.0005	22.22	0.875	7/8	1.0	0.039	20°	0.222	0.49	15300	3450	28400	6400
5305K(2)	25	0.9843	0.010	0.0004	62	2.4409	0.013	0.0005	25.4	1.000	1	1.0	0.039	20°	0.367	0.81	21100	4750	37700	8500
5306K	30	1.1811	0.010	0.0004	72	2.8346	0.013	0.0005	30.17	1.188	1 3/16	1.0	0.039	20°	0.612	1.35	29000	6550	47000	10600
5306W	30	1.1811	0.010	0.0004	72	2.8346	0.013	0.0005	30.17	1.188	1 3/16	1.0	0.039	30°	0.612	1.35	41000	9300	62000	14000
5307K	35	1.3780	0.012	0.00047	80	3.1496	0.013	0.0005	34.93	1.375	1 3/8	1.5	0.059	20°	0.871	1.92	36000	8300	59500	13400
5307W	35	1.3780	0.012	0.00047	80	3.1496	0.013	0.0005	34.93	1.375	1 3/8	1.5	0.059	30°	0.871	1.92	47900	10800	69200	15600
5308K	40	1.5748	0.012	0.00047	90	3.5433	0.015	0.0006	36.53	1.438	1 7/16	1.5	0.059	20°	1.139	2.51	46000	10400	72400	16300
5308W	40	1.5748	0.012	0.00047	90	3.5433	0.015	0.0006	36.53	1.438	1 7/16	1.5	0.059	30°	1.139	2.51	66600	15000	90600	20400
5309K	45	1.7717	0.012	0.00047	100	3.9370	0.015	0.0006	39.67	1.562	1 9/16	1.5	0.059	20°	1.433	3.16	56400	12700	87000	19600
5309W	45	1.7717	0.012	0.00047	100	3.9370	0.015	0.0006	39.67	1.562	1 9/16	1.5	0.059	30°	1.433	3.16	81000	18300	106000	24000
5310K	50	1.9685	0.012	0.00047	110	4.3307	0.015	0.0006	44.45	1.750	1 3/4	2.0	0.079	20°	2.091	4.61	73000	16600	111000	25000
5310W	50	1.9685	0.012	0.00047	110	4.3307	0.015	0.0006	44.45	1.750	1 3/4	2.0	0.079	30°	2.091	4.61	97000	22000	126000	28500
5311K	55	2.1654	0.015	0.0006	120	4.7244	0.015	0.0006	49.22	1.938(3)	1 15/16	2.0	0.079	20°	2.722	6.00	86700	19500	124400	28000
5311W	55	2.1654	0.015	0.0006	120	4.7244	0.015	0.0006	49.22	1.938(3)	1 15/16	2.0	0.079	20°	2.722	6.00	113000	25500	144000	32500
5312W	60	2.3622	0.015	0.0006	130	5.1181	0.018	0.0007	53.98	2.125(3)	2 1/8	2.0	0.079	20°	3.423	7.54	151000	34000	191000	43000
5313W	65	2.5591	0.015	0.0006	140	5.5118	0.018	0.0007	58.72	2.312(3)	2 5/16	2.0	0.079	20°	4.163	9.17	173000	39000	213000	48000
5314W	70	2.7559	0.015	0.0006	150	5.9055	0.018	0.0007	63.50	2.500(3)	2 1/2	2.0	0.079	20°	5.362	11.82	195000	44000	239000	54000
5315W	75	2.9528	0.015	0.0006	160	6.2992	0.025	0.0010	68.30	2.689(3)	2 11/16	2.0	0.079	20°	6.428	14.17	222000	50000	266000	60000
5316W	80	3.1496	0.015	0.0006	170	6.6929	0.025	0.0010	68.28	2.688(3)	2 11/16	2.0	0.079	20°	7.366	16.24	248000	56000	284000	64000
5317W	85	3.3465	0.020	0.0008	180	7.0866	0.025	0.0010	73.02	2.875(4)	2 7/8	2.5	0.098	20°	8.827	19.46	279000	63000	308000	69500
5318W	90	3.5433	0.020	0.0008	190	7.4803	0.030	0.0012	73.02	2.875(4)	2 7/8	2.5	0.098	20°	9.616	21.20	308000	69500	333000	75000
5319W	95	3.7402	0.020	0.0008	200	7.8740	0.030	0.0012	77.77	3.062(4)	3 1/16	2.5	0.098	30°	11.562	25.49	319000	72000	333000	75000
5320W	100	3.9370	0.020	0.0008	215	8.4646	0.030	0.0012	82.55	3.250(4)	3 1/4	2.5	0.098	20°	14.333	31.57	377000	85000	377000	85000
5322W	110	4.3307	0.020	0.0008	240	9.4488	0.030	0.0012	92.08	3.625(4)	3 5/8	2.5	0.098	20°	20.153	44.43	479000	108000	453000	102000
5324W	120	4.7244	0.020	0.0008	260	10.2362	0.035	0.0014	104.78	4.125(4)	4 1/8	2.5	0.098	20°	28.291	62.37	555000	125000	497000	112000
5328W	140	5.5118	0.025	0.0010	300	11.8110	0.035	0.0014	114.30	4.500(5)	4 1/2	3.0	0.118	20°	38.102	84.00	630000	140000	570000	129000

(1) Maximum shaft or housing fillet radius that bearing corners will clear.
(2) Sizes have PRB molded nylon retainers.
(3) Width tolerance is +.00 mm to -.15 mm (+.000 to -.006").
(4) Width tolerance is +.00 mm to -.20 mm (+.000 to -.008").
(5) Width tolerance is +.00 mm to -.25 mm (+.000 to -.010").
(6) Based on 10^6 revolutions of calculated fatigue life.

Note: See opposite page for shield and snap ring combinations.

SHIELD AND SNAP RING COMBINATIONS

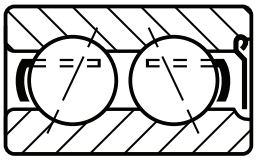

One Shield D

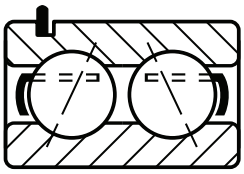

Open Type G

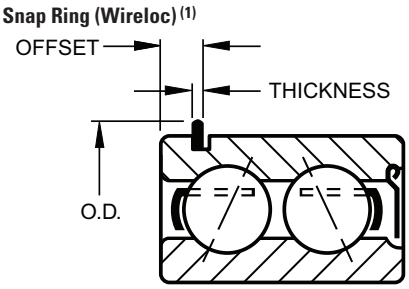

One Shield DG

5200 SERIES

Bearing Number	Width +0.00 mm, -.12 mm +0.000", -.005"		Wt.		Bearing Number	Snap Ring(1) O.D.		Thickness		Offset		Wt.	
	mm	in.	in.	kg	lbs.		mm	in.	mm	in.	mm	in.	kg	lbs.
5200KDD2	15.88	0.625(3)	5/8	0.054	0.12	—	34.5	1 23/64	1.07	0.042	3.05	0.120	—	—
5201KD(DD)	15.88	0.625	5/8	0.064	0.14	—	36.5	1 7/16	1.07	0.042	3.05	0.120	—	—
—	—	—	—	—	—	—	39.3	1 35/64	1.07	0.042	3.05	0.120	—	—
5203KD(KDD3)	17.48	0.688	11/16	0.159	0.35	5203KDG	44.4	1 3/4	1.07	0.042	3.05	0.120	0.127	0.28
5204KD	20.62	0.812	13/16	0.118	0.26	5204KG	52.4	2 1/16	1.07	0.042	3.45	0.136	0.150	0.33
5205KD	22.22	0.875	7/8	0.204	0.45	5205KG	57.5	2 17/64	1.07	0.042	3.45	0.136	0.200	0.44
5206WD	26.97	1.062	1 1/16	0.336	0.74	5206WG(KG)	67.5	2 21/32	1.65	0.065	4.83	0.190	0.331	0.73
5207WD	30.17	1.188	1 3/16	0.546	1.21	5207KG	78.2	3 5/64	1.65	0.065	4.83	0.190	—	—
5208WD	30.17	1.188	1 3/16	0.662	1.46	—	86.5	3 13/32	1.65	0.065	4.83	0.190	—	—
5209WD	30.17	1.188	1 3/16	0.712	1.57	5209WG(KG)	91.3	3 19/32	1.65	0.065	4.83	0.190	0.721	1.59
5210WD	33.32	1.312	1 5/16	0.816	1.80	5210WG(KG)	96.4	3 51/64	2.41	0.095	5.59	0.220	0.771	1.70
5211WD	33.32	1.312	1 5/16	1.043	2.30	5211WG(KG)	106.4	4 3/16	2.41	0.095	5.59	0.220	1.066	2.35
5212WD	39.67	1.562	1 9/16	1.497	3.30	5212WG(KG)	116.3	4 37/64	2.41	0.095	5.59	0.220	1.424	3.14
5213WD	—	—	—	—	—	—	129.4	5 3/32	2.77	0.109	6.73	0.265	—	—
5214WD(2)	39.67	1.562	1 9/16	2.137	4.71	—	134.5	5 19/64	2.77	0.109	6.73	0.265	—	—
—	—	—	—	—	—	5215G(2)	139.7	5 1/2	2.77	0.109	6.73	0.265	2.327	5.13
5216DD(2)	47.62	1.875	1 7/8	3.062	6.75	5216G(2)	149.6	5 57/64	2.77	0.109	7.54	0.297	2.962	6.53
—	—	—	—	—	—	5217G(2)	159.5	6 9/32	2.77	0.109	7.54	0.297	3.724	8.21
5218WD	52.37	2.062	2 1/16	4.504	9.93	—	169.5	6 43/64	2.77	0.109	7.54	0.297	—	—
—	—	—	—	—	—	5219G(2)	182.6	7 3/16	3.05	0.120	8.61	0.339	5.498	12.12

5300 SERIES

Bearing Number	Width +0.00 mm, -.12 mm +0.000", -.005"		Wt.		Bearing(4) Number	Snap Ring(1) O.D.		Thickness		Offset		Wt.	
	mm	in.	in.	kg	lbs.		mm	in.	mm	in.	mm	in.	kg	lbs.
5303KDD	22.25	0.875	7/8	—	—	5303KG	52.4	2 1/16	1.07	0.042	3.45	0.136	0.227	0.50
5304KDD	22.25	0.875	7/8	—	—	5304KG	57.6	2 17/64	1.07	0.042	3.45	0.136	0.231	0.51
5305KDD2	25.4	1.000	1	—	—	5305KG	67.5	2 21/32	1.65	0.065	4.83	0.190	0.376	0.83
5306WD	33.32	1.312	1 5/16	0.640	1.41	5306WG(KG)	78.2	3 5/64	1.65	0.065	4.83	0.190	0.608	1.34
5307WD	38.10	1.500	1 1/2	0.857	1.89	5307WG(KG)	86.5	3 13/32	1.65	0.065	4.83	0.190	0.807	1.78
5308WD	39.67	1.562	1 9/16	1.143	2.52	5308WG(KG)	96.4	3 51/64	2.41	0.095	5.59	0.220	1.102	2.43
5309WD	42.88	1.688	1 11/16	1.665	3.67	5309WG(KG)	106.4	4 3/16	2.41	0.095	5.59	0.220	1.461	3.22
5310WD	47.62	1.875	1 7/8	2.019	4.45	5310WG(KG)	116.3	4 37/64	2.41	0.095	5.59	0.220	1.932	4.26
5311D(4)	52.37	2.062	2 1/16	2.826	6.23	5311WG(KG)	129.4	5 3/32	2.77	0.109	6.73	0.265	2.789	6.15
5312D(4)	57.15	2.250	2 1/4	3.423	7.54	5312WG(KG)	139.7	5 1/2	2.77	0.109	6.73	0.265	3.493	7.70
5313D(4)	61.72	2.438	2 7/16	4.663	10.28	5313WG(KG)	149.6	5 57/64	2.77	0.109	7.54	0.297	4.291	9.46
—	—	—	—	—	—	5314WG(KG)	159.5	6 9/32	2.77	0.109	7.54	0.297	5.466	12.05
						5315KG	169.6	6 43/64	2.77	0.109	7.54	0.297	—	—

(1) The snap ring is normally packaged separately in the box with the bearing.
(2) These sizes have contact angle converging inside bearing (30°).
(3) Inner ring width is 19.05 mm (.7500").
(4) Ring widths are different for these parts. Contact a Timken sales engineer to validate size.

NOTES

WIDE INNER RING

For the most up-to-date wide inner ring ball bearing data, please see the Timken Ball Bearing Housed Unit Catalog.

WIDE INNER RING

For the most up-to-date wide inner ring ball bearing data, please see the Timken Ball Bearing Housed Unit Catalog.

SUPER PRECISION MACHINE TOOL BEARINGS

Overview: Timken is a premier manufacturer of Fafnir® super precision machine tool ball bearings. From standard catalog ABMA/ISO designs to custom sizes and features, Timken has the super precision ball bearing to meet your needs.

- **Sizes:** 10 mm - 300 mm (.3937 in. - 11.8110 in.) bore.
  26 mm - 400 mm (1.0236 in. - 15.7480 in.) O.D.
- **Markets:** High speed machine tool spindles, high stiffness ball screw support systems, low noise "quiet" bearings, aircraft generator, defense.
- **Features:** ABMA ABEC 7/9 (ISO P4/P2) precision level angular contact 15˚, 25˚, 60˚; single and double-row ball screw; high speed seals' ceramic balls; advanced materials.
- **Benefits:** Very high speed; high accuracy; high stiffness; low operating temperature; low noise; low vibration.

D

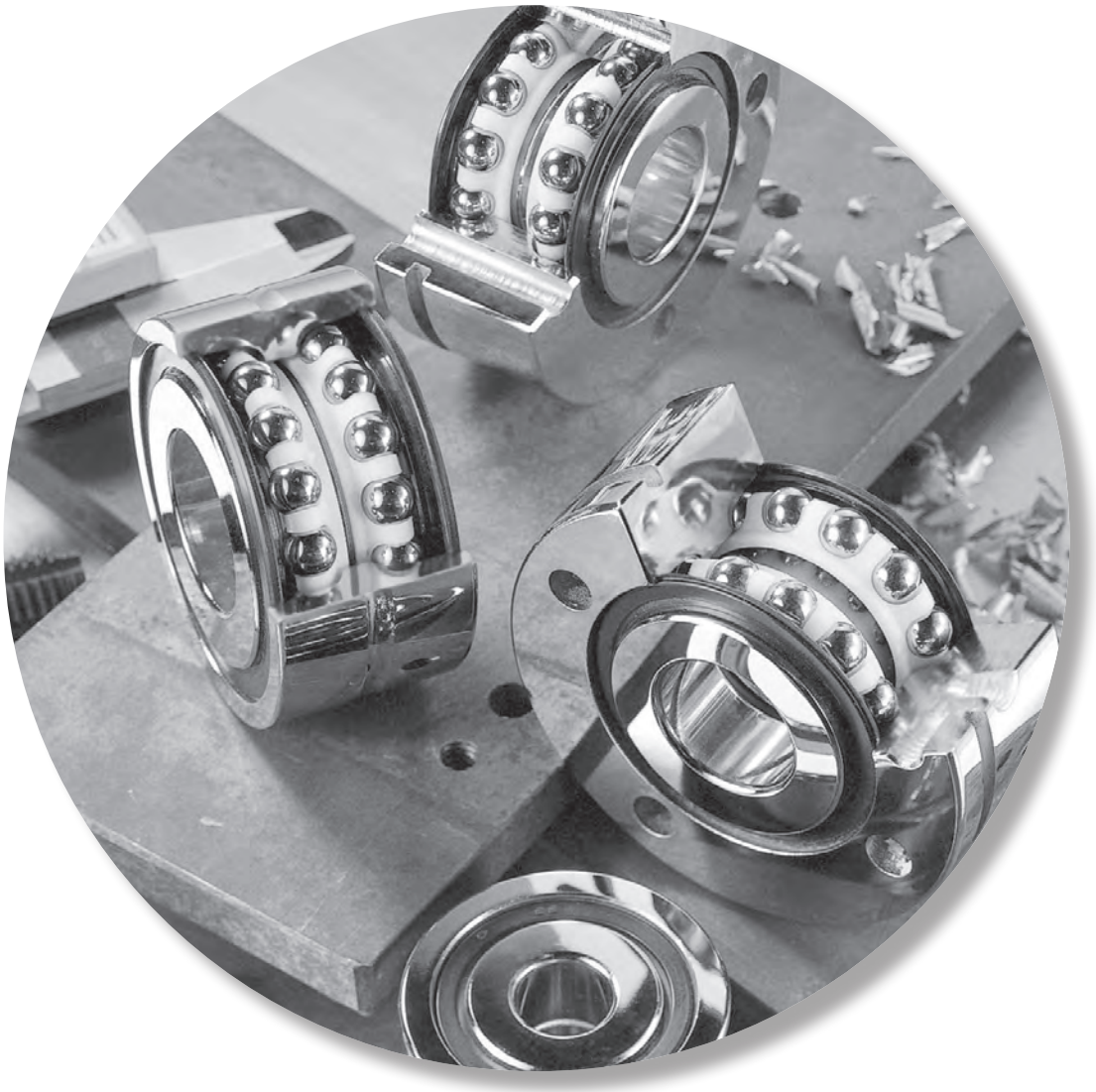

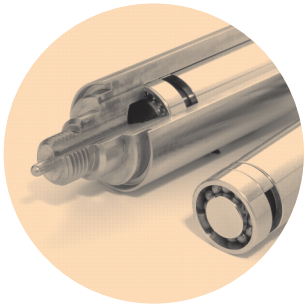

Super Precision Ball Bearings
Angular Contact

Contact Angle:
2 = 15°
3 = 25°

Construction:
K Conrad
WI angular contact; low shoulder on outer ring
WO angular contact; low shoulder on inner ring
WN angular contact; low shoulder on both rings
HX angular contact; low shoulder on both rings

Precision Class:
MM/MMV super high precision between ABEC 7 (ISO P4) and ABEC 9 (ISO P2)
MMX ultra precision • ABEC 9 (ISO P2)

Retainer: No retainer callout implies Timken® Fafnir® PRC
PRB molded nylon cage
PRC molded reinforced nylon cage
CR phenolic (composition) –Timken Fafnir standard
MBR machined bronze

VV high speed seals

2	MM	C	91	04	WI	CR	DUL	A3188

Hybrid Ceramic

Series:
9300 ultra-light
9100 extra-light
99100 extra-light
200 light
300 medium

Bore Size:
(04 and up, multiply these last two numbers by 5 to get bore in millimeters:)
00 10 mm
01 12 mm
02 15 mm
03 17 mm
04 20 mm

Preload: Universal Flush Ground :
***SUX** single bearing, extra-light
***SUL** single bearing, light
***SUM** single bearing, medium
***SUH** single bearing, heavy
DUX duplex pairs of bearings, extra-light
DUL duplex pairs of bearings, light
DUM duplex pairs of bearings, medium
DUH duplex pairs of bearings, heavy
TUX triplex set of bearings, extra-light
TUL triplex set of bearings, light
TUM triplex set of bearings, medium
TUH triplex set of bearings, heavy
QUX quadruplex set of bearings, extra-light
QUL quadruplex set of bearings, light
QUM quadruplex set of bearings, medium
QUH quadruplex set of bearings, heavy

An example of a specification number for other than standard

Super Precision Ball Bearings- Ballscrew Support Bearings

METRIC **MM** **25** **BS** **62** **DU** **H**

- **Bore Size:** mm
- **O.D. Size:** mm
- **Preload Level:** **L** light, **M** medium, ***H** heavy; ***Standard**
- **ABEC 7 (ISO P4)** with tighter lateral eccentricity
- **Ballscrew Support Series Designation for Metric Number**
- **Number of bearings in set:** **DU** duplex (2), **TU** triplex (3), **QU** quadruplex (4)

INCH **MM** **93** **10** **WI** **2** **H** **DU** **H**

- **Ballscrew Support Series Designation for inch Number**
- **Preload Level:** **L** light, **M** medium, ***H** heavy; ***Standard**
- **ABEC 7 (ISO P4)** with tighter lateral eccentricity
- **Relative Size of Bore:** larger number larger bore
- **Design** Specific Timken® Fafnir®
- **Series** High capacity
- **Number of bearings in set:** **DU** duplex (2), **TU** triplex (3), **QU** quadruplex (4)

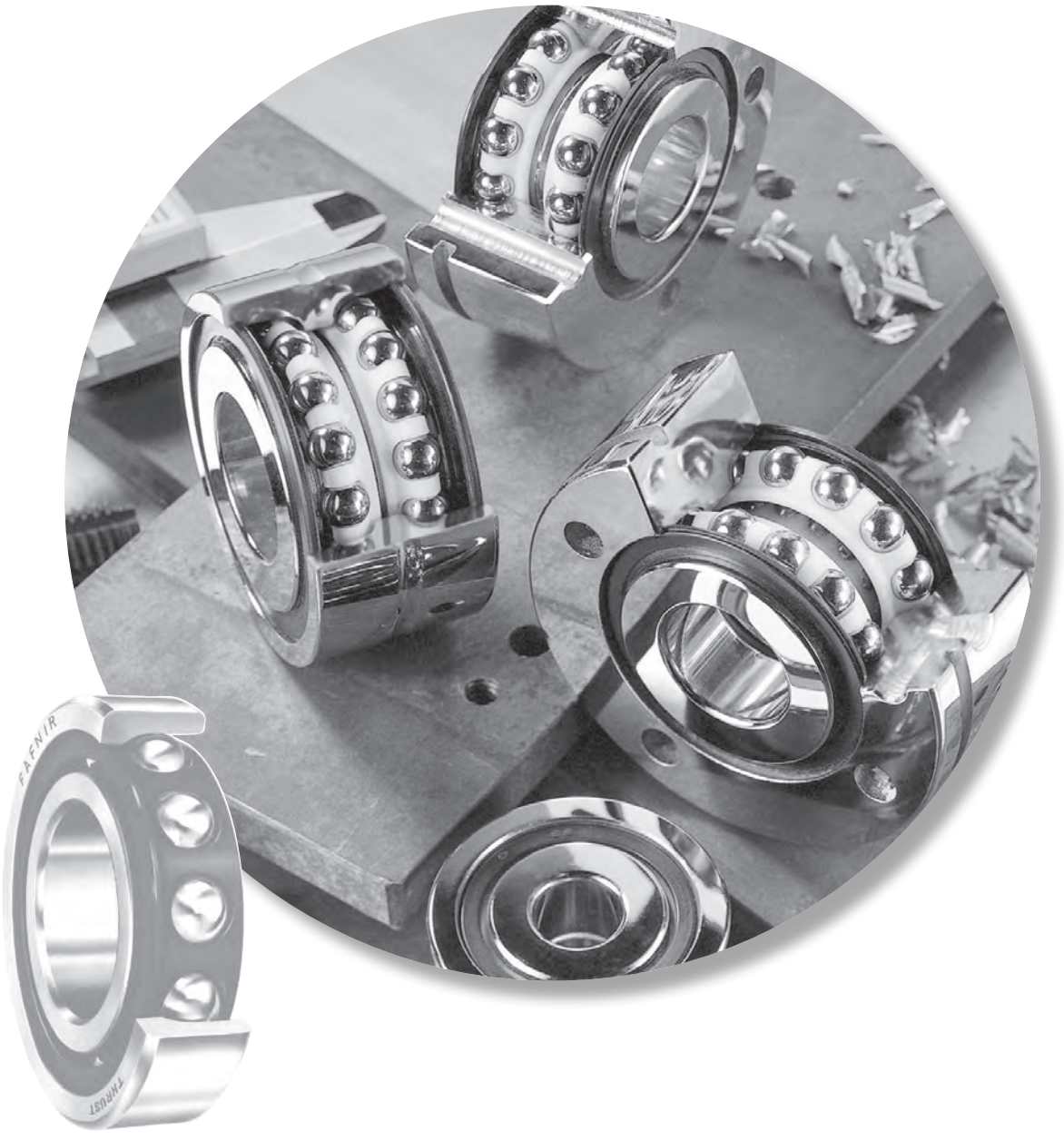
FAFNIR
THRUST

Super Precision Ball Bearings

	Page
Introduction	D54
Ultra-Light 2(3)MM9300WI	D60
Ultra-Light 2(3)MMV9300HX	D68
Extra-Light 2(3)MMV99100WN	D76
Extra-Light 3MMV99100HX	D81
Extra-Light 2MMV99100WN	D82
Extra-Light 3MMV99100WN	D83
Ultra-Light MM9100K	D84
Extra-Light MM9100K	D86
Light 2(3)MM200WI	D88
Light MM200K	D96
Medium 2(3)MM300WI	D100
Medium MM300K	D106
Ball Screw Support Series	D108
BSBU D	D114
BSBU Q	D115
BSPB D	D116
BSPB Q	D117
PILLOW BLOCK UNITS	
MMF Series	D118
MMN Series	D119
Ex-Cell-O Spindle Bearings	D120
MM XWO	D121

INTRODUCTION

MEANINGS OF PREFIXES AND SUFFIXES

In the Timken® Fafnir® numbering system the basic number which denotes the size and series is always is always retained. When special variations are made, as in the case of precision bearings, prefixes and suffixes are added which have definite meanings as follows:

PREFIXES

MM • Super Precision • ABEC 7/ABEC 9 (ISO P4/P2)

2MM/2MMV • Super Precision between ABEC 7 and ABEC 9 (ISO P4/P2) • low contact angle - 15˚

3MM/3MMV • Super Precision between ABEC 7 and ABEC 9 (ISO P4/P2) • high contact angle - 25˚

MMX • Ultra Precision • ABEC 9 • (ISO P2)

SUFFIXES

K • Deep groove radial

WI • Angular contact-low shoulder on outer

WO • Angular contact-low shoulder on inner

WN • Angular contact-low shoulder on both inner and outer

HX • Angular contact-low shoulder on both inner and outer

CR • Composition cage (non-metallic)

MBR • Machined bronze cage

SR • Machined steel cage

PRB • Molded nylon cage

PRC • Molded nylon cage (reinforced)

PRF, PRG • Special high performance material

SUL • Flush-ground single bearing • Light preload

SUM • Flush-ground single bearing • Medium preload

SUH • Flush-ground single bearing • Heavy preload

DUL • Flush-ground duplex bearings • Light preload

DUM • Flush-ground duplex bearings • Medium preload

DUH • Flush-ground duplex bearings • Heavy preload

TUL • Flush-ground triplex bearings • Light preload

TUM • Flush-ground triplex bearings • Medium preload

TUH • Flush-ground triplex bearings • Heavy preload

QUL • Flush-ground quadruplex bearings • Light preload

QUM • Flush-ground quadruplex bearings • Medium preload

QUH • Flush-ground quadruplex bearings • Heavy preload

PERFORMANCE

The performance of a super precision bearing is not completely defined by the ABEC/ISO classes. The latitude of these classes allows for a significant range of variability in product performance among bearing manufacturers. Characteristics such as raceway curvature and uniformity; the balls' conformance to sphericity; race and ball surface finish; waviness of contact areas; preload offset tolerance; cleanliness; calibration of envelope dimensions; matching of bearings within a set; cage design and material; lubricant; radial play; contact angle and precision of ball complement are not defined by ABEC/ISO. All have a direct impact on the service life and performance of a bearing. The lack of a comprehensive standard allows inferior bearings to be marketed as ABEC 7 or 9 (ISO P4 or P2) without the ability to produce superior performance. All Timken MM, MMV, and MMX precision grade comply with strict controls over these non-specified parameters, to provide premium performance.

OPTIMIZED GRADES OF PRECISION

MM, MMV – SUPER PRECISION, SUPER HIGH PRECISION (ABEC 7/9, ISO P4/P2)

Super precision bearings manufactured to the MM(V) tolerance class operate with running accuracy and performance levels meeting ABEC 9 (ISO P2) yet maintain non-critical features at ABEC 7 (ISO P4) level for cost-effectiveness. Bore and O.D. surfaces are coded in micron units for the convenience of the discriminating machine tool builder striving for optimum fitting of crucial spindle components.

MMX – ULTRAPRECISION (ABEC 9, ISO P2)

Super precision bearings with closer tolerances and running accuracies than ABEC 7 (ISO P4) bearings are made to ABEC 9 (ISO P2) tolerances. Bearings produced to these tolerances are generally used on ultra-high-speed grinding spindles designed for tight dimensional tolerances and super-fine surface finishes. Contact your Timken representative for availability of product range.

BEARING TYPES

ANGULAR-CONTACT BEARINGS

2MM-WI types with 15 degree initial contact angle are designed to meet the needs of machine builders for precision bearings which will operate at as low a temperature as possible for a wide range of speeds and operating loads. In order for machines to produce more accurate work at a higher production rate, the bearings must provide a high degree of rigidity in both axial and radial directions while operating at minimum temperatures. For example, precision machining or cutting tools impose heavier loads on bearings than those encountered in precision grinding. In the former, speeds are slower and loads heavier than the latter, where speeds are high and loads light. The 2MM-WI Type gives the machine builder the flexibility required to meet such variations in applications.

3MM-WI manufactured with 25 degree contact angle, are for use on applications where the loading on the bearings is predominately thrust – and a high degree of axial rigidity is a definite requirement. Typical applications for these are large vertical rotary surface grinders, horizontal and vertical disc grinders, and thrust bearing applications for heavy-duty lathes where the bearings must directly carry extremely high tail stock or chucking pressure.

2MM-WI &
3MM-WI Types

2MM-WO with 15 degree initial contact angle are designed for extremely high-speed applications where centrifugal force of the balls is the principal load on the bearing. Unlike the MM-WI Type, which has a low shoulder outer ring, the 2MM-WO Type has full shoulders on both sides of the outer race and a low shoulder on one side of the inner ring. This design permits assembly with a maximum complement of balls and a one-piece cage which pilots against the precision-ground lands of the outer ring. Generally this bearing series is supplied with a separable inner ring and ball retaining cage along with special race geometry for extremely high-speed operation.

2MMV and 3MMV-HX are dimensionally interchangeable with equivalent 9100, 99100, 9300 and ISO Series-10 and 19 bearings. These designs enable spindle heads to remove more material in less time while maintaining superior machining tolerances. This is achieved through a proven combination of unique ball complements with precision engineering raceway geometries.

HXVV Types

2MMV and 3MMV-HX VV possess all of the high-speed advantages of the HX but with true high speed seals. These bearing seals protect lubricant from outside contaminants while ensuring internal lubricant retention, extending service life significantly.

2MMV and 3MMV 99100WN are available with 15 degree or 25 degree contact angle variations and have been developed to operate under the demanding requirements of high-speed machine tools. They incorporate design features which permit operation at higher speeds than standard angular contact ball bearings. The bore, outside diameter and width are the same as the MM9100 Series.

2MMV99100 Types

BALL SCREW SUPPORT BEARINGS

To meet the demands of the servo-controlled machinery field, the Timken® Fafnir ® ball screw support bearings are specially designed with steep contact angles and offer high levels of stiffness for ball screw application requirements. Timken's most recent product offering in this area is a series of double-row, sealed, flanged (or cartridge) units that use an integral double-row outer ring to help simplify installation procedures. Timken offers the following ball screw support bearing products:

- Inch Series bearings (MM9300)
- Metric Series bearings (MMBS)
- Flanged Cylindrical Cartridge housings (BSBU)
- Pillow Block housings (BSPB)
- Integral Double-Row units (MMN, MMF)

MM9300WI DUH (Inch)
MM…BS…DUH (Metric)

INTRODUCTION

Workhead and tool spindles are the most important components of machine tools. Consequently, to reach the requirements for spindle speed, work accuracy and finish, selection of the proper size and type of ball bearings to support these spindles is a critical design problem.

Of all the anti-friction bearing types, super precision ball bearings have proved to be the best value for the wide variety of bearing applications covering broad ranges of operating loads, speeds and lubrication conditions. Duplexed, preloaded, angular contact bearings with one-piece composition retainers, have excellent capacity and provide maximum spindle rigidity. These bearings are widely used in achieving faster speeds, greater accuracy, smoother finishes and higher production rates.

Many considerations are involved in the choice of bearings for precision applications. Among those which influence the performance of machine tool spindles are the internal fit-up and geometry of the bearings, the mounting arrangement, the shaft and housing mounting fits, the balance and alignment of the rotating parts, and last, but equally important, the lubrication. While many of these factors are significant in slow-speed applications, all of them must be considered for high-speed spindles.

To minimize deflection under load, shafts for machine tool spindles are designed to have a minimum unsupported length and maximum cross-section. For the same reason, spindle housings are designed heavy enough to carry the work load. Their cross-sections are made as uniform as possible to reduce stress concentration during uneven deflection of the frame due to thermal changes. In addition, heavy, well-proportioned housings can function as sinks to conduct heat away from ball bearings.

SELECTIVE ASSEMBLY

Under certain conditions it may be desirable to control fits more accurately without the added expense of using closer tolerance bearings and assembly parts. This can be accomplished by selective assembly of the bearings, shafts, and housings, after they have been sized and sorted according to bores and outside diameters. Timken provides bore and O.D. micron coding as standard practice for super precision angular contact radial ball bearings. This improved fit-up at assembly provides a higher degree of precision from the spindle.

SUCCESSFUL APPLICATIONS

Detailed assembly drawings on the following pages are representative of successful applications of Timken® Fafnir® super precision bearings on such equipment; high-cycle wheel heads; high-speed internal grinding spindles; super precision work heads; and high-speed router spindles. It is hoped that these arrangements will stimulate questions regarding your particular application problems which will promptly be addressed by your Timken representative.

SPECIAL REQUIREMENTS

High-speed grease-lubricated spindles and heavy precision workheads requiring unusual rigidity and running accuracy are a few of the many special problems involving super precision bearings. These and many other applications generally require design features that can be reviewed by your Timken representative.

APPLICATIONS

HIGH-SPEED INTERNAL GRINDING SPINDLE

Designed for internal precision grinding, this spindle incorporates 2MM9106WO-CR super precision bearings, preloaded by a nest of coiled helical springs mounted in a cartridge. Thrust load exerted by the springs assures intimate contact of the balls with the bearing raceways under all operating conditions. The sealed construction provides highly effective protection against intrusion of coolant and foreign matter. Grease, packed in each bearing prior to assembly, is sealed-in for life. Operating speed of this spindle is 25000 RPM.

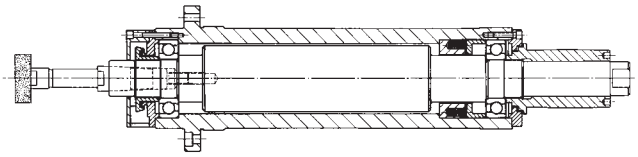

ULTRA PRECISION SURFACE GRINDING SPINDLE

2MMX9122WI-DUM super precision bearings, produced to ABEC9 tolerances, are employed in this horizontal surface grinding spindle for maximum rigidity and accuracy. A back-to-back pair of 2MM312WI-CR-DUL super precision bearings is used at the floating location. This spindle grinds surfaces that are accurate within .000025 inch, flat and parallel, are square within .000010 inch, and to a surface finish of 5 rms, or better. The spindle, driven by a 30 hp motor, operates at 900 RPM. Bearings are packed with grease prior to assembly.

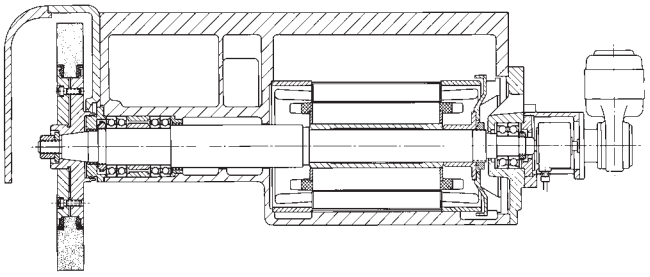

PRECISION SURFACE GRINDING SPINDLE

This motorized surface grinding spindle, operating at 3600 RPM, uses 2MM9107WI-DUM duplex super precision preloaded bearings at both locations, mounted back-to-back, with one pair floating. Labyrinth slinger-type sealing prevents entry of contaminants and seals in the lubrication. Bearings are grease lubricated for life.

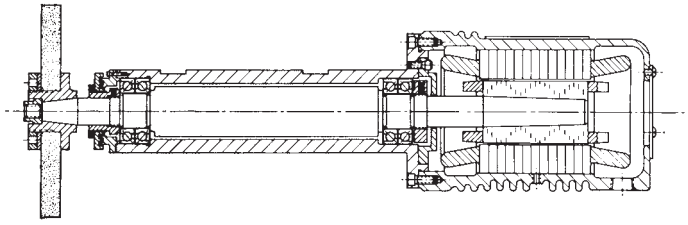

HEAVY-DUTY PRECISION BORING SPINDLE

Super precision, duplexed, preloaded bearings mounted back-to-back are used at each location in this boring spindle to assure smooth performance and a high degree of radial and axial rigidity. Operating speeds vary between 200 and 3000 RPM. Equal-length spacers between the bearings at the work end increase spindle rigidity. When the bearings are properly positioned on the shaft and the respective rings securely clamped, the preload is reproduced and no subsequent adjustment is required. Just prior to assembly, each bearing is packed with grease for life.

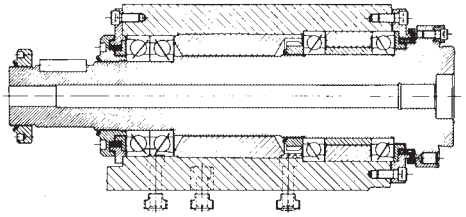

SIX-SPINDLE AUTOMATIC SCREW MACHINE

This bearing arrangement meets the demand for a high-speed, heavy-duty, multiple-spindle screw machine to operate with constant accuracy at maximum production. Because of the hollow shaft construction and the short distance between bearings, extra-light series duplex pairs are used at each location. This affords a high degree of radial rigidity and adds stiffness to the shaft. By mounting a duplex pair of flanged (3MMF) bearings with a 2MM super precision bearing, back-to-back, under a predetermined preload at the front end, accuracy and rigidity of the spindle are assured and permit a straight housing bore. The rear pair of back-to-back bearings is allowed to float in the housing, making an outer-ring spacer unnecessary. Lubrication is by pressure-feed oil circulation.

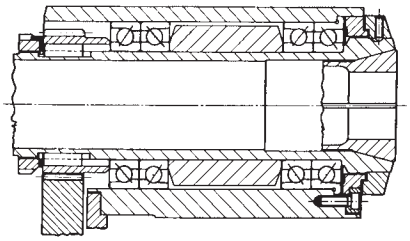

HIGH-SPEED PRECISION BORING HEAD

This high-speed boring head operates at 2500 to 3000 RPM, employing angular-contact, super precision bearings. The front bearings are of different sizes. The outer ring of the larger bearing abuts and is clamped against the housing shoulder. The inboard bearing is permitted to move axially in its housing under spring load. At the rear location two bearings, of the same size and spring loaded, are allowed to float in the housing as temperature differentials occur in the operation spindle. With this head, interference shafts may be permitted without affecting bearing preload. Excessive heat generation is prevented, resulting in low operating temperatures. Bearings are grease lubricated.

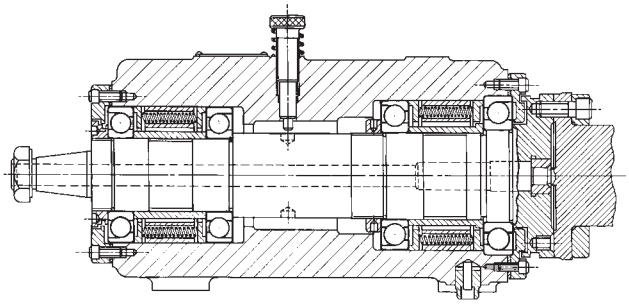

ULTRA PRECISION GRINDING WORKHEAD

This workhead must maintain straightness and roundness accuracy within ten millionths (.000010) of an inch. To meet such rigid requirements for extremely close dimensional control, ultra precision ball bearings and a shaft of extra stiffness are used. The bearings for such applications are manufactured to tolerances closer than those for ABEC 9 (ISO P2) specifications. Equally important is the high degree of workmanship and accuracy with which the shaft, housing and component parts of the workhead must be made. Upper section shows a four-bearing arrangement for heavy work. Lower half shows a two-bearing mounting for lighter work. In either case, the bearings are packed with grease, prior to mounting.

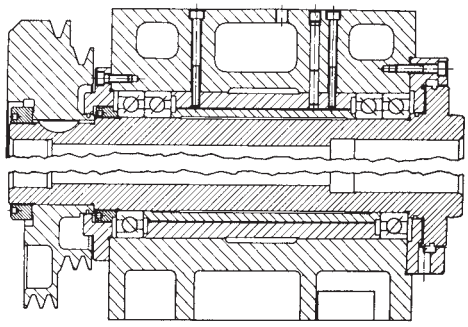

PRECISION TOOLROOM SURFACE GRINDER SPINDLE

Timken® Fafnir® duplexed, super precision, preloaded bearings used in this spindle provide the high degree of rigidity in both directions necessary to meet requirements for modern surface grinding and to assure efficient performance at a low operating temperature. The housing is bored straight-through to assure true alignment – the housing shoulders are eliminated. The precision ground outer sleeve is doweled to the housing to provide the means for stabilizing the spindle axially at the work end bearing location. The rear pair of bearings floats to compensate for thermal changes. Bearings are grease lubricated for life just prior to assembly.

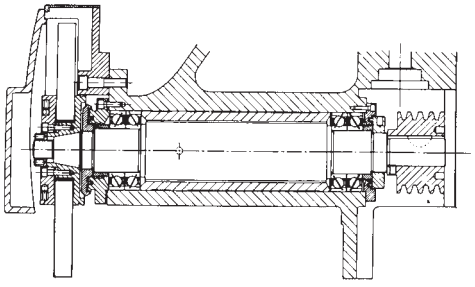

SINGLE BAR MACHINE

This spindle is supported by two pairs of 2MM9124WI-DUM super precison bearings, mounted back-to-back in tandem pairs. Operating speeds vary from 78 to 1500 RPM. A pair of 2MM9122WI-DUM bearings mounted in tandem carries a 25000 pound thrust load during the unchucking operation. The bearings are grease packed for life prior to assembly.

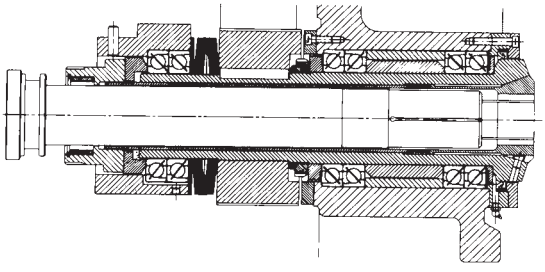

100,000 RPM HIGH-CYCLE WHEELHEAD

Super precision 2MMX9101WO-CR bearings produced to ABEC 9 (ISO P2) RPM tolerances are spring-loaded in this wheelhead which operates at 100,000 RPM. Oil mist lubrication is employed and the motor is water cooled.

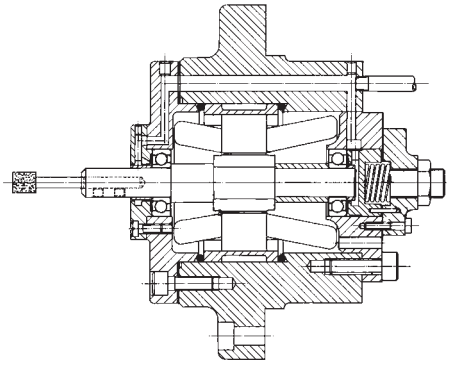

PRECISION JIG-BORING SPINDLE

This jig-boring spindle delivers extreme accuracy over a wide range of speeds. Excellently designed, it is supported with 2MM210WI-DUM grease-lubricated super precision bearings. With this spindle, holes located to an accuracy of one ten-thousandth (.0001) of an inch are bore ground straight and to size limits of better than two ten-thousandths (.0002) of an inch.

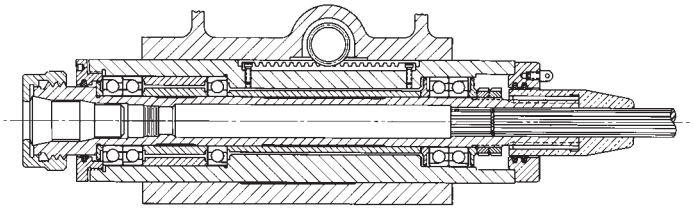

SUPER PRECISION LATHE HEADSTOCK

This lathe spindle produces work held to a roundness of 35 millionths (.000035) of an inch. Maximum operating speed is 4800 RPM. Tandem pair of 3MM9114WI-DUL bearings is opposed by a spring-loaded 3MM9113WI bearing, resulting in excellent spindle rigidity. Bearings are prelubricated with grease.

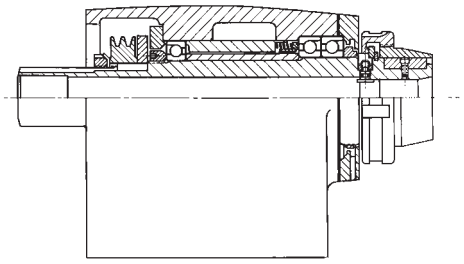

HIGH-SPEED MOTORIZED ROUTER

A specially matched duplex pair of Timken® Fafnir® 2MM210WI-DU-FS223 super precision ball bearings, mounted back-to-back at the work end, affords the necessary bearing rigidity to permit routing through aluminum plate one inch thick with a single pass. The upper bearing is spring-loaded and permitted to float. Router is driven by a 30 hp motor at speeds up to 15000 RPM, and uses oil mist lubrication.

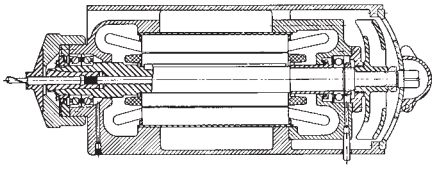

PRECISION VERTICAL MILLING SPINDLE

This spindle operates at 12 different speeds ranging from 260 to 6200 rpm under a wide variety of conditions. At the work end, two duplex pairs of Timken Fafnir 2MM212WI-DUL preloaded bearings are mounted in tandem in a back-to-back arrangement, separated by spacers of equal length. This affords extremely high radial and axial rigidity. At the center, a pair of Timken Fafnir 2MM210WI-DUL bearings mounted back-to-back permits axial float of the spindle to compensate for thermal changes.

The driving pulley shaft is rigidly supported by a widely spaced duplex pair of Timken Fafnir 2MM212WI-DUL preloaded bearings. All bearings are grease packed for life.

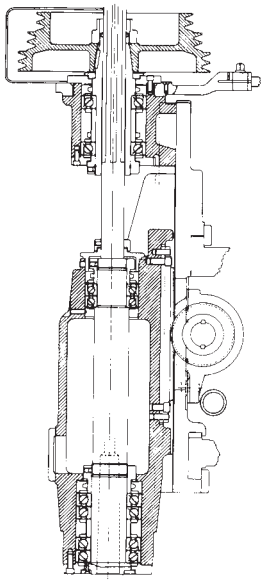

ULTRA-LIGHT 2(3)MM9300WI (ISO 19) SERIES

DIMENSIONAL SERIES METRIC

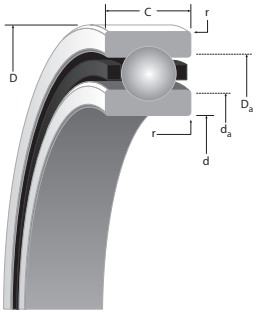

SUPER PRECISION MM:

Running accuracy and performance meet ABEC 9 (ISO P2) levels. Non-critical features conform to ABEC 7 (ISO P4) requirements.

WI CONSTRUCTION:

- Incorporates low shoulder on non-thrust side of outer rings.
- Maximum complement of balls separated by one-piece cage piloted against a ground thrust shoulder land of the outer ring.

Bearing Number						(2MM) LOAD RATINGS (steel ball & ceramic ball)			(3MM) LOAD RATINGS (steel ball & ceramic ball)		
2MM or 3MM	d Bore	D O.D.	C Width[1]	Ball Qty. x Dia.	Wt.	C_o (stat)	C_e (dyn)	Limiting Speed[Ng]	C_o (stat)	C_e (dyn)	Limiting Speed[Ng]
	in/tol: +0; -.000(µm)			mm	kg	N		RPM	N		RPM
9300WI	10 (4)	22 (5)	6 (40)	12 x 3.2	0.01	1640 1460	3510 3510	77500 93000	1580 1410	3380 3380	69800 83760
9301WI	12 (4)	24 (5)	6 (80)	13 x 3.2	0.01	1840 1640	3690 3690	67200 80640	1770 1580	3550 3550	66500 79800
9302WI	15 (4)	28 (5)	7 (80)	13 x 3.6	0.02	2370 2110	4560 4560	55600 66720	2280 2030	4360 4360	50000 60000
9303WI	17 (4)	30 (5)	7 (80)	14 x 3.6	0.02	2800 2500	4970 4970	50100 60120	2680 2380	4740 4740	45100 5120
9304WI	20 (5)	37 (6)	9 (120)	14 x 4.8	0.04	4560 4050	8080 8080	42100 50520	4360 3880	7700 7700	41600 49920
9305WI	25 (5)	42 (6)	9 (120)	17 x 4.8	0.04	5750 5120	9040 9040	34800 41760	5470 4860	8590 8590	31300 37500
9306WI	30 (5)	47 (6)	9 (120)	19 x 4.8	0.05	6610 5890	9540 9540	29700 35640	6270 5580	9040 9040	26700 32000
9307WI	35 (6)	55 (7)	10 (120)	19 x 5.6	0.08	9020 8020	12600 12600	25400 30480	8530 7590	11600 11600	22900 27500
9308WI	40 (6)	62 (7)	12 (120)	19 x 6.4	0.11	11700 10400	16000 16000	22400 26880	11100 9890	15100 15100	20200 2250
9309WI	45 (6)	68 (7)	12 (120)	21 x 6.4	0.13	13200 11700	16800 16800	20000 24000	12500 11100	15900 15900	18000 21600
9310WI	50 (6)	72 (7)	12 (120)	23 x 6.4	0.14	14600 13000	17600 17600	18300 21960	13800 12300	16600 16600	16500 14800
9311WI	55 (7)	80 (7)	13 (150)	23 x 7.1	0.19	18500 16400	21800 21800	16600 19920	17400 15500	20600 20600	14900 17900
9312WI	60 (7)	85 (8)	13 (150)	25 x 7.1	0.20	20200 18000	22700 22700	15300 18360	19000 16900	21400 21400	13800 16500
9313WI	65 (7)	90 (8)	13 (150)	27 x 7.1	0.22	21900 19500	23600 23600	14200 17040	20400 18100	22200 22200	12800 15300
9314WI	70 (7)	100 (8)	16 (150)	24 x 8.7	0.34	29000 25800	32000 32000	13100 15720	27300 24300	30200 30200	11800 14100
9315WI	75 (7)	105 (8)	16 (150)	25 x 8.7	0.36	30300 26900	32500 32500	12300 14760	28400 25200	30600 30600	11100 13300
9316WI	80 (7)	110 (8)	16 (150)	27 x 8.7	0.39	32700 29100	33800 33800	11600 13920	30500 27100	31900 31900	10400 12500
9317WI	85 (8)	120 (8)	18 (200)	26 x 9.5	0.56	37500 33400	38700 38700	10800 12960	35000 31200	36500 36500	9700 11600
9318WI	90 (8)	125 (9)	18 (200)	26 x 10.3	0.57	44000 39200	45000 45000	10300 12360	41200 36700	42400 42400	9300 11100
9319WI	95 (8)	130 (9)	18 (200)	28 x 10.3	0.60	47400 42200	46800 46800	9800 11760	44200 39300	44100 44100	8800 10500
9320WI	100 (8)	140 (9)	20 (200)	29 x 10.3	0.85	48800 43400	47200 47200	9100 10920	45500 40500	44400 44400	8200 9800
9322WI	110 (8)	150 (9)	20 (200)	31 x 10.3	0.92	51700 46000	48400 48400	8400 10080	48200 42900	45600 45600	7600 9100
9324WI	120 (8)	165 (10)	22 (200)	30 x 11.9	1.24	66900 59500	62000 62000	7700 9240	62300 55,500	58300 58300	6900 8300
9326WI	130 (10)	180 (10)	24 (250)	30 x 13.5	1.65	86400 76900	78500 78500	7100 8520	80500 71700	73900 73900	6400 7700
9328WI	140 (10)	190 (10)	24 (250)	32 x 13.5	1.75	91600 81500	80700 80700	6600 7920	85400 76000	76000 76000	5900 7000
9330WI	150 (10)	210 (10)	28 (250)	27 x 17.5	2.61	130800 116400	119200 119200	6200 7440	122700 109200	112400 112400	5600 6700
9332WI	160 (10)	220 (10)	28 (250)	27 x 18.3	2.75	143100 127300	128900 128900	5800 6960	134100 119300	121600 121600	5800 6690
9334WI	170 (10)	230 (11)	28 (250)	29 x 18.3	2.88	153600 13670	133700 133700	5500 6600	143200 127500	126000 126000	5000 6000
9340WI	200 (12)	280 (13)	38 (300)	27 x 23.8	6.29	243300 216300	209400 209400	4600 5520	228800 203600	19700 197700	4100 4900

[Ng] For a single, grease lubricated, spring preloaded bearing. This value to be used in permissible Operating Speed (Sp) calculation.
[1] Width tolerance of preloaded bearing set +0/-0.25 mm (+0/-0.010").
[2] ABMA STD 20 (r_{as} max).

r	Suggested Shoulder Diameters				Shaft Diameter		Mounting Fits		FIXED				FLOATING				Bearing Number
	d_a (Shaft)		D_a (Housing)						Housing Bore (Stationary)		Mounting Fits		Housing Bore (Stationary)		Housing Clearance		
Rad.(2)	Max.	Min.	Max.	Min.	Min.	Max.	Loose	Tight	Min.	Max.	Tight	Loose	Max.	Min.	Max.	Min.	2MM or 3MM
mm	mm	mm	mm	mm	mm	mm	mm	mm	mm	mm	mm	mm	mm	mm	mm	mm	
0.3	13.2	13	19.6	19.3	9.995	10.000	0.005	0.004	22	22.005	0.000	0.010	22.010	22.005	0.015	0.005	9300WI
0.3	15.2	14.9	21.6	21.3	11.995	12.000	0.005	0.004	24	24.005	0.000	0.010	24.010	24.005	0.015	0.005	9301WI
0.3	18.3	18.1	25.5	25.2	14.995	15.000	0.005	0.004	28	28.005	0.000	0.010	28.010	28.005	0.015	0.005	9302WI
0.3	20.3	20	27.5	27.2	16.995	17.000	0.005	0.004	30	30.005	0.000	0.010	30.010	30.005	0.015	0.005	9303WI
0.3	24.1	23.9	33.7	33.4	19.995	20.000	0.005	0.005	37	37.006	0.000	0.012	37.010	37.005	0.016	0.005	9304WI
0.3	29.1	28.9	38.7	38.4	24.995	25.000	0.005	0.005	42	42.006	0.000	0.012	42.010	42.005	0.016	0.005	9305WI
0.3	34.1	33.9	43.7	43.4	29.995	30.000	0.005	0.005	47	47.006	0.000	0.012	47.012	47.007	0.018	0.007	9306WI
0.6	40	39.5	51.1	50.6	34.995	35.000	0.005	0.006	55	55.008	0.000	0.015	55.012	55.007	0.019	0.007	9307WI
0.6	45.1	44.6	57.9	57.4	39.995	40.000	0.005	0.006	62	62.008	0.000	0.015	62.012	62.007	0.019	0.007	9308WI
0.6	50.7	50.1	63.4	62.9	44.995	45.000	0.005	0.006	68	68.008	0.000	0.015	68.012	68.007	0.019	0.007	9309WI
0.6	55.1	54.6	67.9	67.4	49.995	50.000	0.005	0.006	72	72.008	0.000	0.015	72.011	72.007	0.019	0.007	9310WI
1	60.9	60.4	75.2	74.7	54.995	55.000	0.005	0.007	80	80.008	0.000	0.015	80.012	80.008	0.020	0.008	9311WI
1	65.8	65.3	80.2	79.7	59.995	60.000	0.005	0.007	85	85.008	0.000	0.016	85.016	85.009	0.024	0.009	9312WI
1	70.8	70.3	85.2	84.7	64.995	65.000	0.005	0.007	90	90.008	0.000	0.016	90.015	90.007	0.023	0.007	9313WI
1	76.8	76.3	94.3	93.8	69.995	70.000	0.005	0.007	100	100.008	0.000	0.016	100.018	100.010	0.025	0.010	9314WI
1	81.9	81.1	99.4	98.6	74.995	75.005	0.005	0.012	105	105.008	0.000	0.016	105.019	105.011	0.026	0.011	9315WI
1	86.9	86.1	104.4	103.6	79.995	80.005	0.005	0.012	110	110.008	0.000	0.016	110.018	110.010	0.025	0.010	9316WI
1	93.6	92.8	112.7	111.9	84.995	85.005	0.005	0.012	120	120.008	0.000	0.016	120.018	120.010	0.025	0.010	9317WI
1	97.8	97	118.5	117.7	89.995	90.005	0.005	0.013	125	125.008	0.000	0.017	125.021	125.011	0.030	0.011	9318WI
1	102.8	102	123.5	122.7	94.995	95.005	0.005	0.013	130	130.009	0.000	0.018	130.020	130.010	0.029	0.010	9319WI
1	110.3	109.5	131	130.2	99.995	100.005	0.005	0.013	140	140.009	0.000	0.018	140.020	140.010	0.029	0.010	9320WI
1	120.3	119.5	141	140.2	109.995	110.005	0.005	0.013	150	150.009	0.000	0.018	150.023	150.012	0.032	0.012	9322WI
1	131.2	130.4	155	154.3	119.995	120.005	0.005	0.013	165	165.01	0.000	0.020	165.022	165.012	0.032	0.012	9324WI
1.5	142.1	141.4	169.2	168.4	129.995	130.005	0.005	0.015	180	180.01	0.000	0.020	180.022	180.012	0.032	0.012	9326WI
1.5	152.1	151.4	179.2	178.4	139.995	140.005	0.005	0.015	190	190.01	0.000	0.021	190.022	190.012	0.033	0.012	9328WI
2	163.1	162.4	198.2	197.4	149.995	150.005	0.005	0.015	210	210.011	0.000	0.022	210.025	210.015	0.036	0.015	9330WI
2	173.2	172.4	208.2	207.4	159.995	160.005	0.005	0.015	220	220.011	0.000	0.022	220.025	220.015	0.036	0.015	9332WI
2	185.4	184.7	216.1	215.4	169.995	170.005	0.005	0.015	230	230.011	0.000	0.022	230.025	230.015	0.036	0.015	9334WI
2.1	216.8	216	264.5	263.7	199.993	200.008	0.007	0.019	280	280.013	0.000	0.026	280.031	280.018	0.044	0.018	9340WI

ULTRA-LIGHT 2(3)MM9300WI (ISO 19) SERIES

DIMENSIONAL SERIES INCHES

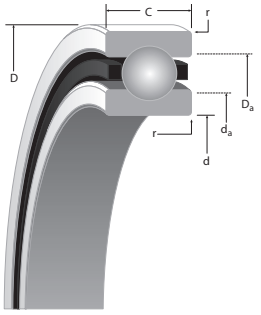

SUPER PRECISION MM:

Running accuracy and performance meet ABEC 9 (ISO P2) levels. Non-critical features conform to ABEC 7 (ISO P4) requirements.

WI CONSTRUCTION:

- Incorporates low shoulder on non-thrust side of outer rings.
- Maximum complement of balls separated by one-piece cage piloted against a ground thrust shoulder land of the outer ring.

Bearing Number						(2MM) LOAD RATINGS (steel ball & ceramic ball)			(3MM) LOAD RATINGS (steel ball & ceramic ball)		
2MM or 3MM	d Bore	D O.D.	C Width(1)	Ball Qty. x Dia.	Wt.	C_o (stat)	C_e (dyn)	Limiting Speed(Ng)	C_o (stat)	C_e (dyn)	Limiting Speed(Ng)
	in./tol: +0; -.000(µm)			in.	lbs.	lbs.		RPM	lbs.		RPM
9300WI	0.3937 (1.5)	0.8661 (2)	0.2362 (16)	12 x 1/8	0.02	370 330	790 790	77500 93000	360 320	760 760	69800 83760
9301WI	0.4724 (1.5)	0.9449 (2)	0.2362 (31)	13 x 1/8	0.03	410 370	830 830	67200 80640	400 350	800 800	60500 79800
9302WI	0.5906 (1.5)	1.1024 (2)	0.2756 (31)	13 x 9/64	0.04	530 470	1030 1030	55600 66720	510 460	980 980	50000 60000
9303WI	0.6693 (1.5)	1.1811 (2)	0.2756 (31)	14 x 9/64	0.04	630 560	1120 1120	50100 60120	600 540	1070 1070	45100 54120
9304WI	0.7874 (2)	1.4567 (2.5)	0.3543 (47)	14 x 3/16	0.08	1020 910	1820 1820	42100 50520	920 870	1730 1730	37900 49920
9305WI	0.9843 (2)	1.6535 (2.5)	0.3543 (47)	17 x 3/16	0.1	1290 1150	2030 2030	34800 41760	1230 1090	1930 1930	31300 37560
9306WI	1.1811 (2)	1.8504 (2.5)	0.3543 (47)	19 x 3/16	0.11	1490 1320	2150 2150	29700 35640	1410 1260	2030 2030	26700 32040
9307WI	1.378 (2.5)	2.1654 (3)	0.3937 (47)	19 x 7/32	0.17	2030 1800	2830 2830	25400 30480	1920 1710	2680 2680	22900 27480
9308WI	1.5748 (2.5)	2.4409 (3)	0.4724 (47)	19 x 1/4	0.25	2640 2350	3600 3600	22400 26880	2500 2220	3400 3400	20200 24240
9309WI	1.7717 (2.5)	2.6772 (3)	0.4724 (47)	21 x 1/4	0.29	2960 2640	3785 3785	20000 24000	2810 2500	3560 3560	18000 21600
9310WI	1.9685 (2.5)	2.8346 (3)	0.4724 (47)	23 x 1/4	0.3	3290 2930	3950 3950	18300 21960	3100 2760	3730 3730	16500 19800
9311WI	2.1654 (3)	3.1496 (3)	0.5118 (59)	23 x 9/32	0.41	4150 3700	4900 4900	16600 19920	3920 3490	4620 4620	14900 17880
9312WI	2.3622 (3)	3.3465 (3)	0.5118 (59)	25 x 9/32	0.44	4540 4040	5100 5100	15300 18360	4270 3800	4820 4820	13800 16560
9313WI	2.5591 (3)	3.5433 (3)	0.5118 (59)	27 x 9/32	0.47	4910 4370	5290 5290	14200 17040	4580 4080	4990 4990	12800 15360
9314WI	2.7559 (3)	3.937 (3)	0.6299 (59)	24 x 11/32	0.76	6510 5800	7200 7200	13100 15720	6130 5450	6790 6790	11800 14160
9315WI	2.9528 (3)	4.1339 (3)	0.6299 (59)	25 x 11/32	0.80	6810 6060	7310 7310	12300 14760	6380 5670	6890 6890	11100 13320
9316WI	3.1496 (3)	4.3307 (3)	0.6299 (59)	27 x 11/32	0.85	7350 6540	7600 7600	11600 13920	6860 6100	7170 7170	10400 12480
9317WI	3.3465 (3)	4.7244 (3)	0.7087 (79)	26 x 3/8	1.23	8440 7510	8700 8700	10800 12960	7880 7010	8200 8200	9700 11640
9318WI	3.5433 (3)	4.9213 (3.5)	0.7087 (79)	26 x 13/32	1.26	9900 8810	10100 10100	10300 12360	9270 8250	9540 9540	9300 11160
9319WI	3.7402 (3)	5.1181 (3.5)	0.7087 (79)	28 x 13/32	1.33	10700 9480	10500 10500	9800 11760	9930 8840	9910 9910	8800 10560
9320WI	3.937 (3)	5.5118 (3.5)	0.7874 (79)	29 x 13/32	1.87	11000 9760	10600 10600	9100 10920	10200 9100	9900 9900	8200 9840
9322WI	4.3307 (3)	5.9055 (3.5)	0.7874 (79)	31 x 13/32	2.02	11600 10300	10900 10900	8400 10080	10800 9650	10200 10200	7600 9120
9324WI	4.7244 (3)	6.4961 (4)	0.8661 (79)	30 x 15/32	2.74	15000 13400	13900 13900	7700 9240	14000 12500	13100 13100	6900 8280
9326WI	5.1181 (4)	7.0866 (4)	0.9449 (98)	30 x 17/32	3.63	19400 17300	17600 17600	7100 8520	18100 16100	16600 16600	6400 7680
9328WI	5.5118 (4)	7.4803 (4.5)	0.9449 (98)	32 x 17/32	3.85	20600 18300	18200 18200	6600 7920	19200 17100	17100 17100	5900 7080
9330WI	5.9055 (4)	8.2677 (4.5)	1.1024 (98)	27 x 11/16	5.75	20400 26200	26805 26805	6200 7440	21600 24500	25300 25300	5600 6720
9332WI	6.2992 (4)	8.6614 (4.5)	1.1024 (98)	27 x 23/32	6.06	32200 28600	29000 29000	5800 6960	30100 26800	27300 27300	5800 6960
9334WI	6.6929 (4)	9.0551 (4.5)	1.1024 (98)	29 x 23/32	6.34	34500 30700	30100 30100	5500 6600	32200 28700	28300 28300	5000 6000
9340WI	7.874 (4.5)	11.0236 (5)	1.4961 (118)	27 x 15/16	13.87	54600 48600	47100 47100	4600 5520	51400 45800	44400 44400	4100 4920

(Ng) For a single, grease lubricated, spring preloaded bearing. This value to be used in permissible Operating Speed (Sp) calculation.
(1) Width tolerance of preloaded bearing set +0/-0.25 mm (+0/-0.010").
(2) ABMA STD 20 (r_{as} max).

r	Suggested Shoulder Diameters				Shaft Diameter		Mounting Fits		FIXED				FLOATING				
	d_a (Shaft)		D_a (Housing)						Housing Bore (Stationary)		Mounting Fits		Housing Bore (Stationary)		Housing Clearance		
Rad. (2)	Max.	Min.	Max.	Min.	Min.	Max.	Loose	Tight	Min.	Max.	Tight	Loose	Max.	Min.	Max.	Min.	
in.	in.	in.	in.	in.	in.	in.	in.	in.	in.	in.	in.	in.	in.	in.	in.	in.	
0.012	0.52	0.51	0.77	0.76	0.3935	0.3937	0.0002	0.00015	0.8661	0.8663	0.0000	0.0004	0.86650	0.86630	0.00060	0.00020	9300WI
0.012	0.60	0.59	0.85	0.84	0.4722	0.4724	0.0002	0.00015	0.9449	0.9451	0.0000	0.0004	0.94530	0.94510	0.00060	0.00020	9301WI
0.012	0.72	0.71	1.00	0.99	0.5904	0.5906	0.0002	0.00015	1.0236	1.0238	0.0000	0.0004	1.02400	1.02380	0.00060	0.00020	9302WI
0.012	0.80	0.79	1.08	1.07	0.6691	0.6693	0.0002	0.00015	1.1811	1.1813	0.0000	0.0004	1.18150	1.18130	0.00060	0.00020	9303WI
0.012	0.95	0.94	1.33	1.32	0.7872	0.7874	0.0002	0.0002	1.4567	1.4570	0.0000	0.0005	1.45710	1.45690	0.00070	0.00020	9304WI
0.012	1.15	1.14	1.52	1.51	0.9841	0.9843	0.0002	0.0002	1.6535	1.6538	0.0000	0.0005	1.65390	1.65370	0.00070	0.00020	9305WI
0.012	1.34	1.33	1.72	1.71	1.1809	1.1811	0.0002	0.0002	1.8504	1.8507	0.0000	0.0005	1.85090	1.85070	0.00080	0.00030	9306WI
0.024	1.57	1.55	2.01	1.99	1.3778	1.3780	0.0002	0.00025	2.1654	2.1657	0.0000	0.0006	2.16590	2.16570	0.00080	0.00030	9307WI
0.024	1.78	1.76	2.28	2.26	1.5746	1.5748	0.0002	0.00025	2.4409	2.4412	0.0000	0.0006	2.44140	2.44120	0.00080	0.00030	9308WI
0.024	1.99	1.97	2.50	2.48	1.7715	1.7717	0.0002	0.00025	2.6772	2.6775	0.0000	0.0006	2.67770	2.67750	0.00080	0.00030	9309WI
0.024	2.17	2.15	2.67	2.65	1.9683	1.9685	0.0002	0.00025	2.8346	2.8349	0.0000	0.0006	2.83510	2.83490	0.00080	0.00030	9310WI
0.039	2.40	2.38	2.96	2.94	2.1652	2.1654	0.0002	0.0003	3.1496	3.1499	0.0000	0.0006	3.15010	3.14990	0.00080	0.00030	9311WI
0.039	2.59	2.57	3.16	3.14	2.3620	2.3622	0.0002	0.0003	3.3465	3.3468	0.0000	0.0006	3.34710	3.34680	0.00090	0.00030	9312WI
0.039	2.79	2.77	3.35	3.33	2.5589	2.5591	0.0002	0.0003	3.5433	3.5436	0.0000	0.0006	3.54390	3.54360	0.00090	0.00030	9313WI
0.039	3.02	3.00	3.71	3.69	2.7557	2.7559	0.0002	0.0003	3.9370	3.9373	0.0000	0.0006	3.93770	3.93740	0.00100	0.00040	9314WI
0.039	3.22	3.19	3.91	3.88	2.9526	2.9530	0.0002	0.0005	4.1339	4.1342	0.0000	0.0006	4.13460	4.13430	0.00100	0.00040	9315WI
0.039	3.42	3.39	4.11	4.08	3.1494	3.1498	0.0002	0.0005	4.3307	4.3310	0.0000	0.0006	4.33140	4.33110	0.00100	0.00040	9316WI
0.039	3.69	3.66	4.44	4.41	3.3463	3.3467	0.0002	0.0005	4.7244	4.7247	0.0000	0.0006	4.72510	4.72480	0.00100	0.00040	9317WI
0.039	3.85	3.82	4.66	4.63	3.5431	3.5435	0.0002	0.0005	4.9213	4.9216	0.0000	0.0007	4.92210	4.92170	0.00120	0.00040	9318WI
0.039	4.05	4.02	4.86	4.83	3.7400	3.7404	0.0002	0.0005	5.1181	5.1185	0.0000	0.0007	5.11890	5.11850	0.00110	0.00040	9319WI
0.039	4.34	4.31	5.16	5.13	3.9368	3.9372	0.0002	0.0005	5.5118	5.5122	0.0000	0.0007	5.51260	5.51220	0.00110	0.00040	9320WI
0.039	4.74	4.71	5.55	5.52	4.3305	4.3309	0.0002	0.0005	5.9055	5.9059	0.0000	0.0007	5.90640	5.90600	0.00120	0.00050	9322WI
0.039	5.16	5.13	6.10	6.07	4.7242	4.7246	0.0002	0.0005	6.4961	6.4965	0.0000	0.0008	6.49700	6.49660	0.00130	0.00050	9324WI
0.059	5.60	5.57	6.66	6.63	5.1179	5.1183	0.0002	0.0006	7.0866	7.0870	0.0000	0.0008	7.08750	7.08710	0.00130	0.00050	9326WI
0.059	5.99	5.96	7.05	7.02	5.5116	5.5120	0.0002	0.0006	7.4803	7.4807	0.0000	0.0008	7.48120	7.48080	0.00140	0.00050	9328WI
0.079	6.42	6.39	7.80	7.77	5.9053	5.9057	0.0002	0.0006	8.2677	8.2682	0.0000	0.0009	8.26870	8.26830	0.00150	0.00060	9330WI
0.079	6.82	6.79	8.20	8.17	6.2990	6.2994	0.0002	0.0006	8.6614	8.6619	0.0000	0.0009	8.6624	8.6620	0.00150	0.00060	9332WI
0.079	7.30	7.27	8.51	8.48	6.6927	6.6931	0.0002	0.0006	9.0551	9.0556	0.0000	0.0009	9.05610	9.05570	0.00150	0.00060	9334WI
0.083	8.54	8.51	10.41	10.38	7.8737	7.8743	0.0003	0.0008	11.0236	11.0241	0.0000	0.0010	11.02490	11.02440	0.00180	0.00080	9340WI

ULTRA-LIGHT 2MM9300WI (ISO 19) SERIES

DUPLEX PERFORMANCE DATA

MOUNTING ARRANGEMENTS

Suggested
DB

Tandem
DT

Special Applications
DF

Bearing Number	PRELOAD				AXIAL STIFFNESS[1]				RADIAL STIFFNESS[1]			SPACER OFFSETS[1]		
	DUX	DUL	DUM	DUH	X-light	Light	Medium	Heavy	Light	Medium	Heavy	X-Light to Light	Light to Medium	Medium to Heavy
	N				N/µm				N/µm			µm		
METRIC DUPLEX PERFORMANCE DATA 2MM9300WI SERIES														
2MM9300WI	—	15	25	55	14.17	16.44	21.69	29.21	73.11	92.17	115.43	1.3	2.8	4.1
2MM9301WI	—	15	25	55	14.87	17.32	22.74	30.61	76.96	97.42	121.91	1.0	2.5	4.1
2MM9302WI	—	20	45	90	16.44	20.11	26.76	36.55	98.12	123.30	153.91	2.0	3.8	5.6
2MM9303WI	—	20	65	130	17.84	21.86	34.63	47.75	107.91	154.96	192.74	1.8	6.4	6.4
2MM9304WI	—	45	90	160	18.19	26.41	35.68	46.17	148.32	186.09	222.47	4.8	5.8	6.6
2MM9305WI	—	45	110	180	20.64	29.56	43.90	54.57	168.78	228.24	265.15	4.3	7.4	5.3
2MM9306WI	—	45	110	180	22.04	31.48	46.52	57.89	181.55	246.08	286.14	4.1	6.9	5.1
2MM9307WI	—	45	110	240	25.36	33.06	48.27	68.74	189.42	258.68	333.53	3.0	6.6	9.1
2MM9308WI	30	65	160	310	27.28	39.00	55.44	76.08	229.12	304.68	380.76	4.8	7.6	9.4
2MM9309WI	30	90	180	360	30.78	46.35	62.26	85.35	270.22	340.18	425.53	5.8	6.6	9.7
2MM9310WI	40	90	200	400	34.28	48.97	68.91	94.80	286.84	376.21	469.96	5.1	7.6	9.7
2MM9311WI	40	110	240	490	38.83	55.27	76.96	105.46	320.24	416.96	521.03	5.6	8.1	10.7
2MM9312WI	40	110	240	510	43.73	58.24	80.63	112.64	338.08	441.10	559.51	4.6	7.6	10.9
2MM9313WI	70	130	270	530	50.02	65.59	87.62	119.63	378.83	478.00	597.63	4.6	6.9	10.4
2MM9314WI	70	180	360	710	49.67	69.44	93.05	127.50	416.61	525.40	656.75	6.9	8.6	13.0
2MM9315WI	90	180	380	760	53.17	71.18	97.77	134.15	427.81	550.94	688.58	6.1	9.4	13.0
2MM9316WI	90	200	400	800	57.89	78.18	104.59	143.59	468.73	591.16	738.95	6.4	8.6	13.0
2MM9317WI	110	270	530	1070	61.39	85.88	115.78	160.03	521.20	655.00	817.48	8.1	10.7	15.5
2MM9318WI	110	270	530	1070	65.06	90.25	120.51	164.93	528.37	666.72	833.75	7.9	10.2	15.0
2MM9319WI	130	290	580	1160	70.13	97.42	130.13	178.05	570.17	719.36	899.51	7.9	10.2	15.0
2MM9320WI	130	360	710	1470	75.38	108.26	145.52	203.23	626.49	788.27	993.43	9.1	11.2	17.3
2MM9322WI	180	400	800	1600	88.15	125.75	169.48	234.19	681.41	856.84	1068.81	9.1	11.4	17.0
2MM9324WI	200	490	980	1960	97.77	144.47	192.74	265.50	752.94	947.08	1181.97	10.7	13.2	19.3
2MM9326WI	220	620	1220	2450	106.69	150.06	201.48	280.36	846.52	1058.84	1322.07	13.0	14.2	21.3
2MM9328WI	270	620	1250	2560	105.11	159.68	214.43	297.33	883.59	1112.54	1401.30	11.2	14.2	21.8
2MM9330WI	290	850	1690	3450	119.98	181.72	243.99	332.14	954.95	1203.31	1512.71	16.8	18.0	27.4
2MM9332WI	489	980	1980	3960	131.9	173.6	234.1	322.1	1013.5	1281.0	1600.0	12.70	19.80	28.45
2MM9334WI	360	1020	2050	4000	163.36	215.13	288.76	397.02	1085.95	1367.72	1696.36	17.5	19.3	27.2
2MM9340WI	778	1560	3110	6230	164.93	217.05	291.03	399.82	1296.71	1634.27	2042.83	16.3	24.4	36.1
	lbs.				10^6lbs./in.				10^6lbs./in.			in.		
INCH DUPLEX PERFORMANCE DATA 2MM9300WI SERIES														
2MM9300WI	—	3	6	12	0.081	0.094	0.124	0.167	0.418	0.527	0.66	0.00005	0.00011	0.00016
2MM9301WI	—	3	6	12	0.085	0.099	0.13	0.175	0.44	0.557	0.697	0.00004	0.0001	0.00016
2MM9302WI	—	5	10	20	0.094	0.115	0.153	0.209	0.561	0.705	0.88	0.00008	0.00015	0.00022
2MM9303WI	—	5	15	30	0.102	0.125	0.198	0.273	0.617	0.886	1.102	0.00007	0.00025	0.00025
2MM9304WI	—	10	20	35	0.104	0.151	0.204	0.264	0.848	1.064	1.272	0.00019	0.00023	0.00026
2MM9305WI	—	10	25	40	0.118	0.169	0.251	0.312	0.965	1.305	1.516	0.00017	0.00029	0.00021
2MM9306WI	—	10	25	40	0.126	0.18	0.266	0.331	1.038	1.407	1.636	0.00016	0.00027	0.00020
2MM9307WI	—	10	25	55	0.145	0.189	0.276	0.393	1.083	1.479	1.907	0.00012	0.00026	0.00036
2MM9308WI	5	15	35	70	0.156	0.223	0.317	0.435	1.31	1.742	2.177	0.00019	0.00030	0.00037
2MM9309WI	10	20	40	80	0.176	0.265	0.356	0.488	1.545	1.945	2.433	0.00023	0.00026	0.00038
2MM9310WI	10	20	45	90	0.196	0.28	0.394	0.542	1.64	2.151	2.687	0.00020	0.0003	0.00038
2MM9311WI	10	25	55	110	0.222	0.316	0.44	0.603	1.831	2.384	2.979	0.00022	0.00032	0.00042
2MM9312WI	10	25	55	115	0.25	0.333	0.461	0.644	1.933	2.522	3.199	0.00018	0.0003	0.00043
2MM9313WI	15	30	60	120	0.286	0.375	0.501	0.684	2.166	2.733	3.417	0.00018	0.00027	0.00041
2MM9314WI	15	40	80	160	0.284	0.397	0.532	0.729	2.382	3.004	3.755	0.00027	0.00034	0.00051
2MM9315WI	20	40	85	170	0.304	0.407	0.559	0.767	2.446	3.15	3.937	0.00024	0.00037	0.00051
2MM9316WI	20	45	90	180	0.331	0.447	0.598	0.821	2.68	3.38	4.225	0.00025	0.00034	0.00051
2MM9317WI	25	60	120	240	0.351	0.491	0.662	0.915	2.98	3.745	4.674	0.00032	0.00042	0.00061
2MM9318WI	25	60	120	240	0.372	0.516	0.689	0.943	3.021	3.812	4.767	0.00031	0.00040	0.00059
2MM9319WI	30	65	130	260	0.401	0.557	0.744	1.018	3.26	4.113	5.143	0.00031	0.00040	0.00059
2MM9320WI	30	80	160	330	0.431	0.619	0.832	1.162	3.582	4.507	5.68	0.00036	0.00044	0.00068
2MM9322WI	40	90	180	360	0.504	0.719	0.969	1.339	3.896	4.899	6.111	0.00036	0.00045	0.00067
2MM9324WI	45	110	220	440	0.559	0.826	1.102	1.518	4.305	5.415	6.758	0.00042	0.00052	0.00076
2MM9326WI	50	140	275	550	0.61	0.858	1.152	1.603	4.84	6.054	7.559	0.00051	0.00056	0.00084
2MM9328WI	60	140	280	575	0.601	0.913	1.226	1.7	5.052	6.361	8.012	0.00044	0.00056	0.00086
2MM9330WI	65	190	380	775	0.686	1.039	1.395	1.899	5.46	6.88	8.649	0.00066	0.00071	0.00108
2MM9332WI	110	220	445	890	0.753	0.991	1.337	1.839	5.787	7.315	9.135	0.00050	0.00078	0.00112
2MM9334WI	80	230	460	900	0.934	1.23	1.651	2.27	6.209	7.82	9.699	0.00069	0.00076	0.00107
2MM9340WI	175	350	700	1400	0.943	1.241	1.664	2.286	7.414	9.344	11.68	0.00064	0.00096	0.00142

Notes: [1] For DB or DF arrangements only. For other mounting arrangements contact your Timken representative.

ULTRA-LIGHT 3MM9300WI (ISO 19) SERIES

DUPLEX PERFORMANCE DATA

MOUNTING ARRANGEMENTS

Suggested
DB

Tandem
DT

Special Applications
DF

Bearing Number	PRELOAD DUX	DUL	DUM	DUH	AXIAL STIFFNESS(1) Light	Medium	Heavy	RADIAL STIFFNESS(1) Light	Medium	Heavy	SPACER OFFSETS(1) Light to Medium	Medium to Heavy
	N				N/µm			N/µm			µm	
METRIC DUPLEX PERFORMANCE DATA 3MM9300WI SERIES												
3MM9300WI	—	20	45	90	32.7	42.3	55.3	70.5	88.7	110.9	2.54	3.81
3MM9301WI	—	20	45	90	34.5	44.5	58.14	74.4	93.7	117.3	2.03	3.81
3MM9302WI	—	45	90	160	46.4	60.2	75.2	96.9	121.6	145.2	3.30	4.06
3MM9303WI	—	45	130	240	50.7	77.0	98.6	106.5	152.5	184.5	5.59	5.08
3MM9304WI	—	45	155	265	51.8	82.7	102.4	112.4	170.6	202.6	6.60	5.08
3MM9305WI	—	65	180	310	67.9	97.9	122.4	146.7	202.9	242.8	5.33	4.83
3MM9306WI	—	70	180	310	72.9	105.3	130.7	157.8	218.8	262.0	5.08	4.57
3MM9307WI	45	90	240	420	84.6	123.3	152.5	182.8	255.7	304.9	5.84	5.08
3MM9308WI	65	130	310	560	101.8	139.4	174.9	218.8	289.8	349.3	5.84	6.10
3MM9309WI	90	160	360	670	114.7	156.2	199.7	246.3	323.9	396.3	5.84	6.86
3MM9310WI	90	160	400	670	121.5	174.6	210.9	261.5	357.8	419.6	6.60	5.59
3MM9311WI	90	200	490	850	138.7	193.8	239.8	294.5	396.3	472.6	6.86	6.60
3MM9312WI	90	200	510	890	146.7	207.6	257.5	311.1	425.4	508.4	6.86	6.60
3MM9313WI	110	220	530	1070	159.7	221.2	290.0	339.3	454.4	599.2	6.60	8.38
3MM9314WI	130	290	710	1290	171.6	239.4	301.7	366.4	494.8	599.2	8.13	8.64
3MM9315WI	155	310	760	1330	180.8	251.3	313.4	385.7	518.8	622.8	8.13	8.13
3MM9316WI	180	330	800	1380	194.8	269.3	332.7	415.7	556.7	663.4	7.87	7.62
3MM9317WI	220	440	1070	1870	214.9	298.2	371.8	462.1	617.0	738.3	9.65	9.65
3MM9318WI	220	400	930	1670	212.7	290.5	363.1	455.3	605.2	730.2	8.38	8.89
3MM9319WI	220	470	1160	2000	235.8	329.9	408.0	504.1	682.1	814.2	9.65	9.14
3MM9320WI	310	600	1470	2560	264.3	369.2	459.8	562.0	754.7	901.4	10.92	10.41
3MM9322WI	330	670	1600	2780	286.5	397.9	494.8	608.7	812.1	968.6	10.92	10.41
3MM9324WI	400	800	1960	3450	311.7	421.3	543.9	663.7	891.8	1,069.2	12.19	12.19
3MM9326WI	510	1020	2450	4340	352.6	488.3	611.5	751.2	1002.2	1198.9	13.46	13.72
3MM9328WI	530	1070	2560	4450	373.1	516.8	642.1	795.4	1062.2	1268.5	13.21	13.21
3MM9330WI	710	1450	3450	6000	401.1	551.1	688.2	854.6	1144.0	1363.0	16.76	16.26
3MM9332WI	800	1580	3950	6940	418.2	588.9	734.1	876.5	1215.9	1455.7	18.80	17.78
3MM9334WI	800	1600	4000	6940	440.0	618.2	760.4	944.3	1280.7	1519.0	18.29	16.26
3MM9340WI	1250	3110	6230	12460	580.1	751.0	985.0	1222.0	1537.0	1920.4	18.80	28.70
	lbs.				10^6lbs./in.			10^6lbs./in.			in.	
INCH DUPLEX PERFORMANCE DATA 3MM9300WI SERIES												
3MM9300WI	—	5	10	20	0.187	0.242	0.316	0.403	0.507	0.634	0.00010	0.00015
3MM9301WI	—	5	10	20	0.197	0.254	0.332	0.425	0.535	0.670	0.00008	0.00015
3MM9302WI	—	10	20	35	0.265	0.344	0.430	0.554	0.695	0.830	0.00013	0.00016
3MM9303WI	—	10	30	55	0.290	0.440	0.564	0.609	0.872	1.055	0.00022	0.00020
3MM9304WI	—	10	35	60	0.296	0.472	0.585	0.642	0.974	1.157	0.00026	0.00020
3MM9305WI	—	15	40	70	0.388	0.560	0.700	0.839	1.160	1.388	0.00021	0.00019
3MM9306WI	—	15	40	70	0.417	0.602	0.747	0.902	1.251	1.498	0.00020	0.00018
3MM9307WI	10	20	55	95	0.484	0.705	0.872	1.045	1.462	1.743	0.00023	0.00020
3MM9308WI	15	30	70	125	0.582	0.797	1.000	1.251	1.657	1.997	0.00023	0.00024
3MM9309WI	20	35	80	150	0.656	0.893	1.142	1.408	1.852	2.266	0.00023	0.00027
3MM9310WI	20	35	90	150	0.695	0.998	1.206	1.495	2.046	2.399	0.00026	0.00022
3MM9311WI	20	45	110	190	0.793	1.108	1.371	1.684	2.266	2.702	0.00027	0.00026
3MM9312WI	20	45	115	200	0.839	1.187	1.472	1.779	2.432	2.907	0.00027	0.00026
3MM9313WI	25	50	120	240	0.913	1.265	1.658	1.940	2.598	3.426	0.00026	0.00033
3MM9314WI	30	65	160	290	0.981	1.369	1.725	2.095	2.829	3.426	0.00032	0.00034
3MM9315WI	35	70	170	300	1.034	1.437	1.792	2.205	2.966	3.561	0.00032	0.00032
3MM9316WI	40	75	180	310	1.114	1.540	1.902	2.377	3.183	3.793	0.00031	0.00030
3MM9317WI	50	100	240	420	1.229	1.705	2.126	2.642	3.528	4.221	0.00038	0.00038
3MM9318WI	50	90	210	375	1.216	1.661	2.076	2.603	3.460	4.175	0.00033	0.00035
3MM9319WI	50	105	260	450	1.348	1.886	2.333	2.882	3.900	4.655	0.00038	0.00036
3MM9320WI	70	135	330	575	1.511	2.111	2.629	3.213	4.315	5.154	0.00043	0.00041
3MM9322WI	75	150	360	625	1.638	2.275	2.829	3.480	4.643	5.538	0.00043	0.00041
3MM9324WI	90	180	440	775	1.782	2.409	3.110	3.795	5.099	6.113	0.00048	0.00048
3MM9326WI	115	230	550	975	2.016	2.792	3.496	4.295	5.730	6.855	0.00053	0.00054
3MM9328WI	120	240	575	1000	2.130	2.950	3.660	4.548	6.073	7.253	0.00052	0.00052
3MM9330WI	160	325	775	1350	2.296	3.172	3.939	4.886	6.519	7.793	0.00066	0.00064
3MM9332WI	180	355	890	1560	2.388	3.363	4.192	5.119	6.943	8.312	0.00074	0.00070
3MM9334WI	180	360	900	1560	2.512	3.530	4.342	5.392	7.313	8.674	0.00072	0.00064
3MM9340WI	280	700	1400	2800	3.317	4.294	5.632	6.987	8.788	10.980	0.00074	0.00113

Notes: (1) For DB or DF arrangements only. For other mounting arrangements contact your Timken representative.

ULTRA-LIGHT 2MM9300WI (ISO 19) SERIES

SPEED CAPABILITY DATA

Bearing Number	Grease Capacity NBU15 25%	Grease Capacity NBU15 40%	Kluber Isoflex NBU15 15%	Kluber Isoflex NBU15 20%	Operating Speeds[2] (DB Mounting)[1] Grease DUL	Grease DUM	Grease DUH	Oil DUL	Oil DUM	Oil DUH
	grams	grams	grams	grams	RPM	RPM	RPM	RPM	RPM	RPM
2MM9300WI	0.09	0.15	0.06	0.08	62000	46500	31000	105400	79100	52700
2MM9301WI	0.11	0.17	0.07	0.10	53800	40300	26900	91500	68500	45700
2MM9302WI	0.17	0.28	0.12	0.15	44500	33400	22200	75700	56800	37700
2MM9303WI	0.19	0.30	0.12	0.16	40100	30100	20000	68200	51200	34000
2MM9304WI	0.40	0.60	0.25	0.34	33700	25300	16800	57300	43000	28600
2MM9305WI	0.40	0.70	0.29	0.39	27800	20900	13900	47300	35500	23600
2MM9306WI	0.50	0.80	0.34	0.45	23800	17800	11900	40500	30300	20200
2MM9307WI	0.80	1.20	0.51	0.68	20300	15200	10200	34500	25800	17300
2MM9308WI	1.20	1.90	0.80	1.07	17900	13400	9000	30400	22800	15300
2MM9309WI	1.30	2.10	0.88	1.18	16000	12000	8000	27200	20400	13600
2MM9310WI	1.40	2.30	0.95	1.27	14600	11000	7300	24800	18700	12400
2MM9311WI	1.90	3.00	1.30	1.70	13300	10000	6600	22600	17000	11200
2MM9312WI	2.00	3.20	1.40	1.80	12200	9200	6100	20700	15600	10400
2MM9313WI	2.10	3.40	1.40	1.90	11400	8500	5700	19400	14500	9700
2MM9314WI	3.60	5.70	2.40	3.20	10500	7900	5200	17900	13400	8800
2MM9315WI	3.80	6.10	2.50	3.40	9800	7400	4900	16700	12600	8300
2MM9316WI	4.00	6.40	2.70	3.50	9300	7000	4600	15800	11900	7800
2MM9317WI	5.30	8.60	3.60	4.80	8600	6500	4300	14600	11100	7300
2MM9318WI	5.90	9.40	3.90	5.20	8200	6200	4100	13900	10500	7000
2MM9319WI	6.10	9.70	4.10	5.40	7800	5900	3900	13300	10000	6600
2MM9320WI	7.50	12.00	5.00	6.70	7300	5500	3600	12400	9400	6100
2MM9322WI	8.10	13.00	5.40	7.30	6700	5000	3400	11400	8500	5800
2MM9324WI	11.10	17.80	7.40	9.90	6200	4600	3100	10500	7800	5300
2MM9326WI	14.60	23.30	9.70	13.00	5700	4300	2800	9700	7300	4800
2MM9328WI	15.50	24.80	10.40	13.80	5300	4000	2600	9000	6800	4400
2MM9330WI	24.80	39.70	16.60	22.10	5000	3700	2500	8500	6300	4300
2MM9332WI	26.20	41.90	17.50	23.30	4600	3500	2300	7900	5900	3900
2MM9334WI	28.20	45.20	18.90	25.10	4400	3300	2200	7500	5600	3700
2MM9340WI	56.80	90.90	37.90	50.60	3700	2800	1800	6300	4700	3100

[1] For other mounting arrangement configurations refer to the engineering section on Permissible Speed calculation methods.
[2] For ceramic ball complements use 120% of speeds shown.

ULTRA-LIGHT 3MM9300WI (ISO 19) SERIES

SPEED CAPABILITY DATA

Bearing Number	Grease Capacity NBU15		Kluber Isoflex NBU15		Operating Speeds[2] (DB Mounting) [1]					
	25%	40%	15%	20%	DUL	Grease DUM	DUH	DUL	Oil DUM	DUH
	grams	grams	grams	grams	RPM	RPM	RPM	RPM	RPM	RPM
3MM9300WI	0.09	0.15	0.06	0.08	55800	41850	27900	94860	71190	47430
3MM9301WI	0.11	0.17	0.07	0.10	48420	36270	24210	82350	61650	41130
3MM9302WI	0.17	0.28	0.12	0.15	40050	30060	19980	68130	51120	33930
3MM9303WI	0.19	0.30	0.12	0.16	36090	27090	18000	61380	46080	30600
3MM9304WI	0.40	0.60	0.25	0.34	30330	22770	15120	51570	38700	25740
3MM9305WI	0.40	0.70	0.29	0.39	25020	18810	12510	42570	31950	21240
3MM9306WI	0.50	0.80	0.34	0.45	21420	16020	10710	36450	27270	18180
3MM9307WI	0.80	1.20	0.51	0.68	18270	13680	9180	31050	23220	15570
3MM9308WI	1.20	1.90	0.80	1.07	16110	12060	8100	27360	20520	3770
3MM9309WI	1.30	2.10	0.88	1.18	14400	10800	7200	24480	18360	12240
3MM9310WI	1.40	2.30	0.95	1.27	13140	9900	6570	22320	16830	11160
3MM9311WI	1.90	3.00	1.30	1.70	11970	9000	5940	20340	15300	10080
3MM9312WI	2.00	3.20	1.40	1.80	10980	8280	5490	18630	14040	9360
3MM9313WI	2.10	3.40	1.40	1.90	10260	7650	5130	17460	13050	8730
3MM9314WI	3.60	5.70	2.40	3.20	9450	7110	4680	16110	12060	7920
3MM9315WI	3.80	6.10	2.50	3.40	8820	6660	4410	15030	11340	7470
3MM9316WI	4.00	6.40	2.70	3.50	8370	6300	4140	14220	10710	7020
3MM9317WI	5.30	8.60	3.60	4.80	7740	5850	3870	13140	9990	6570
3MM9318WI	5.90	9.40	3.90	5.20	7380	5580	3690	12510	9450	6300
3MM9319WI	6.10	9.70	4.10	5.40	7020	5310	3510	11970	9000	5940
3MM9320WI	7.50	12.00	5.00	6.70	6570	4950	3240	11160	8460	5490
3MM9322WI	8.10	13.00	5.40	7.30	6030	4500	3060	10260	7650	5220
3MM9324WI	11.10	17.80	7.40	9.90	5580	4140	2790	9450	7020	4770
3MM9326WI	14.60	23.30	9.70	13.00	5130	3870	2520	8730	6570	4320
3MM9328WI	15.50	24.80	10.40	13.80	4770	3600	2340	8100	6120	3960
3MM9330WI	24.80	39.70	16.60	22.10	4500	3330	2250	7650	5670	3870
3MM9332WI	26.20	41.90	17.50	23.30	4140	3150	2070	7110	5310	3510
3MM9334WI	28.20	45.20	18.90	25.10	3960	2970	1980	6750	5040	3330
3MM9340WI	56.80	90.90	37.90	50.60	3330	2520	1620	5670	4230	2790

[1] For other mounting arrangement configurations refer to the engineering section on Permissible Speed calculation methods.
[2] For ceramic ball complements use 120% of speeds shown.

ULTRA-LIGHT 2(3)MMV9300HX (ISO 19) SERIES

DIMENSIONAL SERIES METRIC

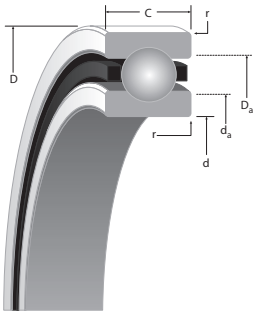

SUPER PRECISION MM:

Running accuracy and performance meet ABEC 9 (ISO P2) levels. Non-critical features conform to ABEC 7 (ISO P4) requirements.

WI CONSTRUCTION:

- Incorporates low shoulder on non-thrust side of outer rings.
- Maximum complement of balls separated by one-piece cage piloted against a ground thrust shoulder land of the outer ring.

Bearing Number						(2MM) LOAD RATINGS (steel ball & ceramic ball)			(3MM) LOAD RATINGS (steel ball & ceramic ball)		
2MM or 3MM	d Bore	D O.D.	C Width[1]	Ball Qty. x Dia.	Wt.	C_o (stat)	C_e (dyn)	Limiting Speed[Ng]	C_o (stat)	C_e (dyn)	Limiting Speed[Ng]
	mm/tol: +0; -(µm)			mm	kg	N		RPM	N		RPM
9300HX	10 (4)	22 (5)	6 (40)	12 x 3.2	0.01	534 489	1468 1468	91700 110040	534 489	1379 1379	82500 99000
9301HX	12 (4)	24 (5)	6 (80)	14 x 3.2	0.01	610 540	1500 1500	80000 96000	580 520	1420 1420	72000 86400
9302HX	15 (4)	28 (5)	7 (80)	13 x 3.6	0.02	979 890	2091 2091	66800 80160	890 801	2046 2046	60100 72120
9303HX	17 (4)	30 (5)	7 (80)	14 x 3.6	0.02	1023 934	2224 2224	60400 72480	979 890	2091 2091	54400 65280
9304HX	20 (5)	37 (6)	9 (120)	14 x 4.8	0.04	1690 1512	3514 3514	50200 60240	1601 1423	3336 3336	45200 54240
9305HX	25 (5)	42 (6)	9 (120)	17 x 4.8	0.04	2046 1824	3781 3781	41800 50160	1913 1735	3603 3603	37600 45120
9306HX	30 (5)	47 (6)	9 (120)	19 x 4.8	0.05	2402 2135	4048 4048	35900 43080	2224 1957	3825 3825	32300 38760
9307HX	35 (6)	55 (7)	10 (120)	19 x 5.6	0.08	3158 2847	5115 5115	30500 36600	2980 2624	4804 4804	27500 33000
9308HX	40 (6)	62 (7)	12 (120)	19 x 6.4	0.11	6005 5338	10675 10675	28000 33600	5693 5071	10097 10097	25200 30240
9309HX	45 (6)	68 (7)	12 (120)	21 x 6.4	0.13	6716 6005	11164 11164	25000 30000	6405 5693	10586 10586	22500 27000
9310HX	50 (6)	72 (7)	12 (120)	23 x 6.4	0.14	7473 6672	11698 11698	22900 27480	7072 6405	11031 11031	20600 24720
9311HX	55 (7)	80 (7)	13 (150)	23 x 7.1	0.19	9430 8407	14500 14500	20700 24840	8896 7917	13700 13700	18600 22320
9312HX	60 (7)	85 (8)	13 (150)	25 x 7.1	0.2	10319 9207	15123 15123	19200 23040	9697 8629	14278 14278	17300 20760
9313HX	65 (7)	90 (8)	13 (150)	27 x 7.1	0.22	11164 9919	15701 15701	17800 21360	10400 9250	14800 14800	16000 19200
9314HX	70 (7)	100 (8)	16 (150)	24 x 8.7	0.34	14767 13166	21306 21306	16400 19680	13922 12365	20105 20105	14800 17760
9315HX	75 (7)	105 (8)	16 (150)	25 x 8.7	0.36	15435 13744	21617 21617	15400 18480	14500 12899	20416 20416	13900 16680
9316HX	80 (7)	110 (8)	16 (150)	27 x 8.7	0.39	16680 14856	22507 22507	14500 17400	15568 13833	21217 21217	13100 15720
9317HX	85 (8)	120 (8)	18 (200)	26 x 9.5	0.56	19171 17036	25754 25754	13500 16200	17836 15879	24242 24242	12200 14640
9318HX	90 (8)	125 (9)	18 (200)	26 x 10.3	0.57	22462 19972	29935 29935	12900 15480	20995 18682	28200 28200	11600 13920
9319HX	95 (8)	130 (9)	18 (200)	28 x 10.3	0.6	24197 21528	31136 31136	12300 14760	22507 20060	29312 29312	10300 12360
9320HX	100 (8)	140 (9)	20 (200)	29 x 10.3	0.85	24864 22151	31403 31403	11400 13680	23174 20639	29535 29535	9900 11800
9322HX	110 (8)	150 (9)	20 (200)	31 x 10.3	0.92	26377 23485	32204 32204	10500 12600	24597 21884	30291 30291	9500 11400
9324HX	120 (8)	165 (10)	22 (200)	30 x 11.9	1.24	34,161 30424	41277 41277	9600 11520	31803 28334	38831 38831	8600 10320
9326HX	130 (10)	180 (10)	24 (250)	30 x 13.5	1.65	44035 39187	52042 52042	8900 10680	41055 36518	48928 48928	8000 9600
9328HX	140 (10)	190 (10)	24 (250)	32 x 13.5	1.75	46704 41544	53821 53821	8300 9960	43501 38742	50707 50707	7500 9000
9330HX	150 (10)	210 (10)	28 (250)	27 x 17.5	2.61	66720 59603	79174 79174	7700 9240	62717 55600	74726 74726	6900 8280

[Ng] For a single, grease lubricated, spring preloaded bearing. This value to be used in permissible Operating Speed (Sp) calculation.
[1] Width tolerance of preloaded bearing set +0/-0.25 mm (+0/-0.010").
[2] ABMA STD 20 (r_{as} max).

r Rad.[2]	Suggested Shoulder Diameters d_a (Shaft) Max.	d_a (Shaft) Min.	D_a (Housing) Max.	D_a (Housing) Min.	Shaft Diameter Min.	Shaft Diameter Max.	Mounting Fits Loose	Mounting Fits Tight	FIXED Housing Bore (Stationary) Min.	FIXED Housing Bore (Stationary) Max.	FIXED Mounting Fits Tight	FIXED Mounting Fits Loose	FLOATING Housing Bore (Stationary) Max.	FLOATING Housing Bore (Stationary) Min.	FLOATING Housing Clearance Max.	FLOATING Housing Clearance Min.	Bearing Number 2MM or 3MM
mm	mm	mm	mm	mm	mm	mm	mm	mm	mm	mm	mm	mm	mm	mm	mm	mm	
0.3	13.2	13	19.6	19.3	9.995	10.000	0.005	0.004	22.000	22.005	0.0000	0.010	22.010	22.005	0.015	0.005	9300HX
0.3	15.2	14.9	21.6	21.3	11.995	12.000	0.005	0.004	24.000	24.005	0.000	0.010	24.010	24.005	0.015	0.005	9301HX
0.3	18.3	18.1	25.5	25.2	14.995	15.000	0.005	0.004	28.000	28.005	0.000	0.010	28.010	28.005	0.015	0.005	9302HX
0.3	20.3	20	27.5	27.2	16.995	17.000	0.005	0.004	30.000	30.005	0.000	0.010	30.010	30.005	0.015	0.005	9303HX
0.3	24.1	23.9	33.7	33.4	19.995	20.000	0.005	0.005	37.000	37.006	0.000	0.012	37.010	37.005	0.016	0.005	9304HX
0.3	29.1	28.9	38.7	38.4	24.995	25.000	0.005	0.005	42.000	42.006	0.000	0.012	42.010	42.005	0.016	0.005	9305HX
0.3	34.1	33.9	43.7	43.4	29.995	30.000	0.005	0.005	47.000	47.006	0.000	0.012	47.012	47.007	0.018	0.007	9306HX
0.6	40	39.5	51.1	50.6	34.995	35.000	0.005	0.006	55.000	55.008	0.000	0.015	55.012	55.007	0.019	0.007	9307HX
0.6	45.1	44.6	57.9	57.4	39.995	40.000	0.005	0.006	62.000	62.008	0.000	0.015	62.012	62.007	0.019	0.007	9308HX
0.6	50.7	50.1	63.4	62.9	44.995	45.000	0.005	0.006	68.000	68.008	0.000	0.015	68.012	68.007	0.019	0.007	9309HX
0.6	55.1	54.6	67.9	67.4	49.995	50.000	0.005	0.006	72.000	72.008	0.000	0.015	72.011	72.007	0.019	0.007	9310HX
1.0	60.9	60.4	75.2	74.7	54.995	55.000	0.005	0.007	80.000	80.008	0.000	0.015	80.012	80.008	0.020	0.008	9311HX
1.0	65.8	65.3	80.2	79.7	59.995	60.000	0.005	0.007	85.000	85.008	0.000	0.016	85.016	85.009	0.024	0.009	9312HX
1.0	70.8	70.3	85.2	84.7	64.995	65.000	0.005	0.007	90.000	90.008	0.0000	0.016	90.015	90.007	0.023	0.007	9313HX
1.0	76.8	76.3	94.3	93.8	69.995	70.000	0.005	0.007	100.000	100.008	0.0000	0.016	100.018	100.010	0.025	0.010	9314HX
1.0	81.9	81.1	99.4	98.6	74.995	75.005	0.005	0.012	105.000	105.008	0.0000	0.016	105.019	105.011	0.026	0.011	9315HX
1.0	86.9	86.1	104.4	103.6	79.995	80.005	0.005	0.012	110.000	110.008	0.0000	0.016	110.018	110.010	0.025	0.010	9316HX
1.0	93.6	92.8	112.7	111.9	84.995	85.005	0.005	0.012	120.000	120.008	0.0000	0.016	120.018	120.010	0.025	0.010	9317HX
1.0	97.8	97.0	118.5	117.7	89.995	90.005	0.005	0.013	125.000	125.008	0.0000	0.017	125.021	125.011	0.030	0.011	9318HX
1.0	102.8	102.0	123.5	122.7	94.995	95.005	0.005	0.013	130.000	130.009	0.0000	0.018	130.020	130.010	0.029	0.010	9319HX
1.0	110.3	109.5	131	130.2	99.995	100.005	0.005	0.013	140.000	140.009	0.0000	0.018	140.020	140.010	0.029	0.010	9320HX
1.0	120.3	119.5	141	140.2	109.995	110.005	0.005	0.013	150.000	150.009	0.0000	0.018	150.023	150.012	0.032	0.012	9322HX
1.0	131.2	130.4	155	154.3	119.995	120.005	0.005	0.013	165.000	165.010	0.0000	0.020	165.022	165.012	0.032	0.012	9324HX
1.5	142.1	141.4	169.2	168.4	129.995	130.005	0.005	0.015	180.000	180.010	0.0000	0.020	180.022	180.012	0.032	0.012	9326HX
1.5	152.1	151.4	179.2	178.4	139.995	140.005	0.005	0.0150	190.000	190.010	0.0000	0.021	190.022	190.012	0.033	0.012	9328HX
2.0	163.1	162.4	198.2	197.4	149.995	150.005	0.005	0.015	210.000	210.011	0.0000	0.022	210.025	210.015	0.036	0.015	9330HX

ULTRA-LIGHT 2(3)MMV9300HX (ISO 19) SERIES

DIMENSIONAL SERIES INCHES

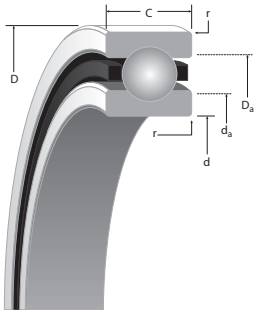

SUPER PRECISION MM:

Running accuracy and performance meet ABEC 9 (ISO P2) levels. Non-critical features conform to ABEC 7 (ISO P4) requirements.

WI CONSTRUCTION:

- Incorporates low shoulder on non-thrust side of outer rings.
- Maximum complement of balls separated by one-piece cage piloted against a ground thrust shoulder land of the outer ring.

Bearing Number						(2MM) LOAD RATINGS (steel ball & ceramic ball)			(3MM) LOAD RATINGS (steel ball & ceramic ball)		
2MM or 3MM	d Bore	D O.D.	C Width[1]	Ball Qty. x Dia.	Wt.	C_o (stat)	C_e (dyn)	Limiting Speed[Ng]	C_o (stat)	C_e (dyn)	Limiting Speed[Ng]
	in./tol: +0; -.000(X)			in.	lbs.	lbs.		RPM	lbs.		RPM
9300HX	0.3937 (1.5)	0.8661 (2)	0.2362 (16)	13 x 3/32	0.02	120 110	330 330	91700 110040	120 110	310 310	82500 99000
9301HX	0.4724 (1.5)	0.9449 (2)	0.2362 (31)	14 x 3/32	0.03	140 120	340 340	80000 96000	130 120	320 320	72000 86400
9302HX	0.5906 (1.5)	1.1024 (2)	0.2756 (31)	16 x 7/64	0.04	220 200	470 470	66800 80160	200 180	460 460	60100 72120
9303HX	0.6693 (1.5)	1.1811 (2)	0.2756 (31)	17 x 7/64	0.04	230 210	500 500	60400 72480	220 200	470 470	54400 65280
9304HX	0.7874 (2)	1.4567 (2.5)	0.3543 (47)	17 x 9/64	0.08	380 340	790 790	50200 60240	360 320	750 750	45200 54240
9305HX	0.9843 (2)	1.6535 (2.5)	0.3543 (47)	20 x 9/64	0.1	460 410	850 850	41800 50160	430 390	810 810	37600 45120
9306HX	1.1811 (2)	1.8504 (2.5)	0.3543 (47)	23 x 9/64	0.11	540 480	910 910	35900 43080	500 440	860 860	32300 38760
9307HX	1.378 (2.5)	2.1654 (3)	0.3937 (47)	25 x 5/32	0.18	710 640	1150 1150	30500 36600	670 590	1080 1080	27500 33000
9308HX	1.5748 (2.5)	2.4409 (3)	0.4724 (47)	19 x 1/4	0.25	1350 1200	2400 2400	28000 33600	1280 1140	2270 2270	25200 30240
9309HX	1.7717 (2.5)	2.6772 (3)	0.4724 (47)	21 x 1/4	0.29	1510 1350	2510 2510	25000 30000	1440 1280	2380 2380	22500 27000
9310HX	1.9685 (2.5)	2.8346 (3)	0.4724 (47)	23 x 1/4	0.3	1680 1500	2630 2630	22900 27480	1590 1440	2480 2480	20600 24720
9311HX	2.1654 (3)	3.1496 (3)	0.5118 (59)	23 x 9/32	0.39	2120 1890	3260 3260	20700 24840	2000 1780	3080 3080	18600 22320
9312HX	2.3622 (3)	3.3465 (3)	0.5118 (59)	25 x 9/32	0.43	2320 2070	3400 3400	19200 23040	2180 1940	3210 3210	17300 20760
9313HX	2.5591 (3)	3.5433 (3)	0.5118 (59)	27 x 9/32	0.45	2510 2230	3530 3530	17800 21360	2340 2080	3320 3320	16000 19200
9314HX	2.7559 (3)	3.937 (3)	0.6299 (59)	24 x 11/32	0.75	3320 2960	4790 4790	16400 19680	3130 2780	4520 4520	14800 17760
9315HX	2.9528 (3)	4.1339 (3)	0.6299 (59)	25 x 11/32	0.8	3470 3090	4860 4860	15400 18480	3260 2900	4590 4590	13900 16680
9316HX	3.1496 (3)	4.3307 (3)	0.6299 (59)	27 x 11/32	0.8	3750 3340	5060 5060	14500 17400	3500 3110	4770 4770	13100 15720
9317HX	3.3465 (3)	4.7244 (3)	0.7087 (79)	26 x 3/8	1.16	4310 3830	5790 5790	13500 16200	4010 3570	5450 5450	12200 14640
9318HX	3.5433 (3)	4.9213 (3.5)	0.7087 (79)	26 x 13/32	1.2	5050 4490	6730 6730	12900 15480	4720 4200	6340 6340	11600 13920
9319HX	3.7402 (3)	5.1181 (3.5)	0.7087 (79)	28 x 13/32	1.26	5440 4840	7000 7000	12300 14760	5060 4510	6590 6590	10300 12360
9320HX	3.937 (3)	5.5118 (3.5)	0.7874 (79)	29 x 13/32	1.8	5590 4980	7060 7060	11400 13680	5210 4640	6640 6640	10000 12000
9322HX	4.3307 (3)	5.9055 (3.5)	0.7874 (79)	31 x 13/32	1.92	5930 5280	7240 7240	10500 12600	5530 4920	6810 6810	9500 11400
9324HX	4.7244 (3)	6.4961 (4)	0.8661 (79)	30 x 15/32	2.6	7680 6840	9280 9280	9600 11520	7150 6370	8730 8730	8600 10320
9326HX	5.1181 (4)	7.0866 (4)	0.9449 (98)	30 x 17/32	3.63	9900 8810	11700 11700	8900 10680	9230 8210	11000 11000	8000 9600
9328HX	5.5118 (4)	7.4803 (4.5)	0.9449 (98)	32 x 17/32	3.85	10500 9340	12100 12100	8300 9960	9780 8710	11400 11400	7500 9000
9330HX	5.9055 (4)	8.2677 (4.5)	1.1024 (98)	27 x 11/16	5.75	15000 13400	17800 17800	7700 9240	14100 12500	16800 16800	6900 8200

[Ng] For a single, grease lubricated, spring preloaded bearing. This value to be used in permissible Operating Speed (Sp) calculation.
[1] Width tolerance of preloaded bearing set +0/-0.25 mm (+0/-0.010").
[2] ABMA STD 20 (r_{as} max).

r Rad.[2]	Suggested Shoulder Diameters d_a (Shaft) Max.	d_a (Shaft) Min.	D_a (Housing) Max.	D_a (Housing) Min.	Shaft Diameter Min.	Shaft Diameter Max.	Mounting Fits Loose	Mounting Fits Tight	FIXED Housing Bore (Stationary) Min.	FIXED Housing Bore (Stationary) Max.	FIXED Mounting Fits Tight	FIXED Mounting Fits Loose	FLOATING Housing Bore (Stationary) Max.	FLOATING Housing Bore (Stationary) Min.	FLOATING Housing Clearance Max.	FLOATING Housing Clearance Min.	Bearing Number 2MM or 3MM
in.	in.	in.	in.	in.	in.	in.	in.	in.	in.	in.	in.	in.	in.	in.	in.	in.	
0.012	0.52	0.51	0.77	0.76	0.3935	0.3937	0.0002	0.00015	0.8661	0.8663	0.0000	0.0004	0.8665	0.8663	0.0006	0.0002	9300HX
0.012	0.6	0.59	0.85	0.84	0.4722	0.4724	0.0002	0.00015	0.9449	0.9451	0.0000	0.0004	0.9453	0.9451	0.0006	0.0002	9301HX
0.012	0.72	0.71	1	0.99	0.5904	0.5906	0.0002	0.00015	1.0236	1.0238	0.0000	0.0004	1.0240	1.0238	0.0006	0.0002	9302HX
0.012	0.8	0.79	1.08	1.07	0.6691	0.6693	0.0002	0.00015	1.1811	1.1813	0.0000	0.0004	1.1815	1.1813	0.0006	0.0002	9303HX
0.012	0.95	0.94	1.33	1.32	0.7872	0.7874	0.0002	0.0002	1.4567	1.4570	0.0000	0.0005	1.4571	1.4569	0.0007	0.0002	9304HX
0.012	1.15	1.14	1.52	1.51	0.9841	0.9843	0.0002	0.0002	1.6535	1.6538	0.0000	0.0005	1.6539	1.6537	0.0007	0.0002	9305HX
0.012	1.34	1.33	1.72	1.71	1.1809	1.1811	0.0002	0.0002	1.8504	1.8507	0.0000	0.0005	1.8509	1.8507	0.0008	0.0003	9306HX
0.024	1.57	1.55	2.01	1.99	1.3778	1.3780	0.0002	0.00025	2.1654	2.1657	0.0000	0.0006	2.1659	2.1657	0.0008	0.0003	9307HX
0.024	1.78	1.76	2.28	2.26	1.5746	1.5748	0.0002	0.00025	2.4409	2.4412	0.0000	0.0006	2.4414	2.4412	0.0008	0.0003	9308HX
0.024	1.99	1.97	2.5	2.48	1.7715	1.7717	0.0002	0.00025	2.6772	2.6775	0.0000	0.0006	2.6777	2.6775	0.0008	0.0003	9309HX
0.024	2.17	2.15	2.67	2.65	1.9683	1.9685	0.0002	0.00025	2.8346	2.8349	0.0000	0.0006	2.8351	2.8349	0.0008	0.0003	9310HX
0.039	2.4	2.38	2.96	2.94	2.1652	2.1654	0.0002	0.0003	3.1496	3.1499	0.0000	0.0006	3.1501	3.1499	0.0008	0.0003	9311HX
0.039	2.59	2.57	3.16	3.14	2.3620	2.3622	0.0002	0.0003	3.3465	3.3468	0.0000	0.0006	3.3471	3.3468	0.0009	0.0003	9312HX
0.039	2.79	2.77	3.35	3.33	2.5589	2.5591	0.0002	0.0003	3.5433	3.5436	0.0000	0.0006	3.5439	3.5436	0.0009	0.0003	9313HX
0.039	3.02	3	3.71	3.69	2.7557	2.7559	0.0002	0.0003	3.9370	3.9373	0.0000	0.0006	3.9377	3.9374	0.0010	0.0004	9314HX
0.039	3.22	3.19	3.91	3.88	2.9526	2.9530	0.0002	0.0005	4.1339	4.1342	0.0000	0.0006	4.1346	4.1343	0.0010	0.0004	9315HX
0.039	3.42	3.39	4.11	4.08	3.1494	3.1498	0.0002	0.0005	4.3307	4.3310	0.0000	0.0006	4.3314	4.3311	0.0010	0.0004	9316HX
0.039	3.69	3.66	4.44	4.41	3.3463	3.3467	0.0002	0.0005	4.7244	4.7247	0.0000	0.0006	4.7251	4.7248	0.0010	0.0004	9317HX
0.039	3.85	3.82	4.66	4.63	3.5431	3.5435	0.0002	0.0005	4.9213	4.9216	0.0000	0.0007	4.9221	4.9217	0.0012	0.0004	9318HX
0.039	4.05	4.02	4.86	4.83	3.7400	3.7404	0.0002	0.0005	5.1181	5.1185	0.0000	0.0007	5.1189	5.1185	0.0011	0.0004	9319HX
0.039	4.34	4.31	5.16	5.13	3.9368	3.9372	0.0002	0.0005	5.5118	5.5122	0.0000	0.0007	5.5126	5.5122	0.0011	0.0004	9320HX
0.039	4.74	4.71	5.55	5.52	4.3305	4.3309	0.0002	0.0005	5.9055	5.9059	0.0000	0.0007	5.9064	5.9060	0.0012	0.0005	9322HX
0.039	5.16	5.13	6.1	6.07	4.7242	4.7246	0.0002	0.0005	6.4961	6.4965	0.0000	0.0008	6.4970	6.4966	0.0013	0.0005	9324HX
0.059	5.6	5.57	6.66	6.63	5.1179	5.1183	0.0002	0.0006	7.0866	7.0870	0.0000	0.0008	7.0875	7.0871	0.0013	0.0005	9326HX
0.059	5.99	5.96	7.05	7.02	5.5116	5.5120	0.0002	0.0006	7.4803	7.4807	0.0000	0.0008	7.4812	7.4808	0.0014	0.0005	9328HX
0.079	6.42	6.39	7.8	7.77	5.9053	5.9057	0.0002	0.0006	8.2677	8.2682	0.0000	0.0009	8.2687	8.2683	0.0015	0.0006	9330HX

ULTRA-LIGHT 2MMV9300HX (ISO 19) SERIES

DUPLEX PERFORMANCE DATA

MOUNTING ARRANGEMENTS

Suggested
DB

Tandem
DT

Special Applications
DF

Bearing Number	PRELOAD Light	Medium	Heavy	AXIAL STIFFNESS(1) Light	Medium	Heavy	RADIAL STIFFNESS(1) Light	Medium	Heavy	SPACER OFFSETS(1) Light to Medium	Medium to Heavy
	N			N/µm			N/µm			µm	
METRIC DUPLEX PERFORMANCE DATA 2MMV9300HX SERIES											
2MMV9300HX	9	25	55	10.2	15.6	21.0	61.0	88.5	110.8	5.6	5.6
2MMV9301HX	9	25	55	10.7	16.7	22.8	61.3	88.2	110.2	5.1	5.6
2MMV9302HX	20	45	85	17.0	22.7	31.0	96.4	120.9	150.9	4.6	6.6
2MMV9303HX	20	45	85	16.9	22.3	30.0	100.9	127.1	159.1	4.6	6.6
2MMV9304HX	20	65	135	18.2	28.5	38.7	109.6	157.9	197.3	7.6	8.1
2MMV9305HX	20	65	135	20.2	31.3	42.3	122.0	176.3	220.5	7.1	7.1
2MMV9306HX	20	65	135	22.0	33.9	45.7	133.7	193.6	242.6	6.1	6.6
2MMV9307HX	45	110	225	30.8	44.6	60.5	185.7	251.7	314.6	7.1	8.6
2MMV9308HX	45	135	265	29.5	45.1	60.1	177.9	259.6	325.7	9.7	10.2
2MMV9309HX	45	155	310	31.5	50.9	68.0	189.4	292.1	366.4	10.7	10.7
2MMV9310HX	65	175	355	38.7	56.7	75.9	232.6	324.6	407.0	9.1	10.7
2MMV9311HX	65	200	400	39.5	60.3	80.5	241.2	352.2	442.0	10.7	11.2
2MMV9312HX	65	225	445	41.7	66.2	88.3	254.1	385.7	483.9	11.7	11.7
2MMV9313HX	65	225	445	43.7	69.3	92.3	266.7	406.1	509.8	11.2	11.2
2MMV9314HX	110	335	665	51.0	78.1	104.5	316.6	461.2	578.4	13.7	14.7
2MMV9315HX	110	335	665	52.3	80.0	107.0	325.0	474.0	594.7	13.2	14.2
2MMV9316HX	110	335	665	54.9	83.8	111.8	341.2	499.0	626.5	12.7	13.7
2MMV9317HX	135	400	800	58.4	89.3	119.3	365.2	533.1	669.2	14.2	15.2
2MMV9318HX	135	400	800	59.4	90.4	120.2	373.1	548.1	688.9	14.2	15.2
2MMV9319HX	135	400	800	62.2	94.5	125.5	390.6	575.9	724.3	13.7	14.7
2MMV9320HX	155	490	975	67.4	104.6	139.5	423.4	630.5	791.8	15.2	15.7
2MMV9322HX	175	535	1065	73.8	112.7	150.4	464.0	678.6	851.9	15.2	16.3
2MMV9324HX	225	665	1335	80.9	123.4	164.7	513.7	752.1	944.3	17.3	18.3
2MMV9326HX	245	735	1465	87.9	133.4	177.0	545.9	805.2	1012.7	17.8	18.8
2MMV9328HX	265	800	1600	94.6	143.6	190.6	587.5	865.4	1088.2	17.8	19.3
2MMV9330HX	355	1065	2135	99.6	151.1	200.6	630.0	930.8	1170.8	22.4	24.4
	lbs.			10^6lbs./in.			10^6lbs./in.			in.	
INCH DUPLEX PERFORMANCE DATA 2MMV9300HX SERIES											
2MMV9300HX	2	6	12	0.0581	0.0894	0.1202	0.3489	0.5059	0.6337	0.00022	0.00022
2MMV9301HX	2	6	12	0.0614	0.0957	0.1301	0.3506	0.5044	0.6300	0.00020	0.00022
2MMV9302HX	5	10	20	0.0972	0.1297	0.1770	0.5509	0.6912	0.8627	0.00018	0.00026
2MMV9303HX	5	10	20	0.0966	0.1275	0.1718	0.5769	0.7266	0.9097	0.00018	0.00026
2MMV9304HX	5	15	30	0.1043	0.1627	0.2213	0.6269	0.9029	1.1280	0.00030	0.00032
2MMV9305HX	5	15	30	0.1154	0.1787	0.2417	0.6977	1.0080	1.2610	0.00028	0.00028
2MMV9306HX	5	15	30	0.1258	0.1940	0.2611	0.7644	1.1070	1.3870	0.00024	0.00026
2MMV9307HX	10	25	50	0.1759	0.2550	0.3460	1.0620	1.4390	1.7990	0.00028	0.00034
2MMV9308HX	10	30	60	0.1688	0.2576	0.3437	1.0170	1.4840	1.8620	0.00038	0.00040
2MMV9309HX	10	35	70	0.1799	0.2910	0.3889	1.0830	1.6700	2.0950	0.00042	0.00042
2MMV9310HX	15	40	80	0.2214	0.3243	0.4340	1.3300	1.8560	2.3270	0.00036	0.00042
2MMV9311HX	15	45	90	0.2260	0.3449	0.4603	1.3790	2.0140	2.5270	0.00042	0.00044
2MMV9312HX	15	50	100	0.2382	0.3783	0.5051	1.4530	2.2050	2.7670	0.00046	0.00046
2MMV9313HX	15	50	100	0.2501	0.3962	0.5278	1.5250	2.3220	2.9150	0.00044	0.00044
2MMV9314HX	25	75	150	0.2915	0.4465	0.5977	1.8100	2.6370	3.3070	0.00054	0.00058
2MMV9315HX	25	75	150	0.2991	0.4575	0.6117	1.8580	2.7100	3.4000	0.00052	0.00056
2MMV9316HX	25	75	150	0.3140	0.4790	0.6390	1.9510	2.8530	3.5820	0.00050	0.00054
2MMV9317HX	30	90	180	0.3339	0.5104	0.6820	2.0880	3.0480	3.8260	0.00056	0.00060
2MMV9318HX	30	90	180	0.3396	0.5167	0.6874	2.1330	3.1340	3.9390	0.00056	0.00060
2MMV9319HX	30	90	180	0.3559	0.5403	0.7174	2.2330	3.2930	4.1410	0.00054	0.00058
2MMV9320HX	35	110	220	0.3852	0.5978	0.7975	2.4210	3.6050	4.5270	0.00060	0.00062
2MMV9322HX	40	120	240	0.4221	0.6444	0.8601	2.6530	3.8800	4.8710	0.00060	0.00064
2MMV9324HX	50	150	300	0.4624	0.7057	0.9418	2.9370	4.3000	5.3990	0.00068	0.00072
2MMV9326HX	55	165	330	0.5028	0.7627	1.0120	3.1210	4.6040	5.7900	0.00070	0.00074
2MMV9328HX	60	180	360	0.5408	0.8209	1.0900	3.3590	4.9480	6.2220	0.00070	0.00076
2MMV9330HX	80	240	480	0.5694	0.8640	1.1470	3.6020	5.3220	6.6940	0.00088	0.00096

Notes: (1) For DB or DF arrangements only. For other mounting arrangements contact your Timken representative.

ULTRA-LIGHT 3MMV9300HX (ISO 19) SERIES

DUPLEX PERFORMANCE DATA

MOUNTING ARRANGEMENTS

Suggested DB

Tandem DT

Special Applications DF

Bearing Number	PRELOAD Light	Medium	Heavy	AXIAL STIFFNESS(1) Light	Medium	Heavy	RADIAL STIFFNESS(1) Light	Medium	Heavy	SPACER OFFSETS(1) Light to Medium	Medium to Heavy
	N			N/µm			N/µm			µm	
METRIC DUPLEX PERFORMANCE DATA 3MMV9300HX SERIES											
3MMV9300HX	22	45	90	28.53	36.82	48.06	60.22	75.61	94.48	2.79	4.06
3MMV9301HX	22	45	90	29.93	38.58	50.28	63.30	79.51	99.41	2.54	4.06
3MMV9302HX	22	65	135	34.07	50.72	66.06	72.78	104.78	131.04	4.06	4.57
3MMV9303HX	22	65	135	35.45	52.71	68.60	75.75	109.14	136.54	4.06	4.32
3MMV9304HX	45	110	225	48.76	67.98	88.46	103.86	140.69	175.95	4.57	5.59
3MMV9305HX	45	110	225	54.17	75.33	97.75	115.68	156.99	196.59	4.06	5.08
3MMV9306HX	45	110	225	59.33	82.33	106.58	126.87	172.47	216.18	3.56	4.57
3MMV9307HX	65	175	355	74.51	106.06	137.72	159.18	220.72	276.34	5.08	5.59
3MMV9308HX	65	225	445	70.62	108.04	139.41	154.45	233.67	293.31	7.11	7.11
3MMV9309HX	90	245	490	83.32	119.21	153.84	182.60	257.80	323.74	6.10	7.11
3MMV9310HX	90	265	535	88.43	130.41	168.25	193.61	282.11	354.17	6.60	7.11
3MMV9311HX	110	335	665	99.24	146.29	188.72	216.70	315.69	396.50	7.11	8.13
3MMV9312HX	110	335	665	104.80	154.33	198.86	228.59	333.88	419.41	6.60	7.62
3MMV9313HX	110	335	665	110.22	162.15	208.66	239.96	351.37	441.80	6.60	7.11
3MMV9314HX	155	490	980	122.31	183.12	235.94	265.50	394.05	495.14	8.64	9.14
3MMV9315HX	155	490	980	125.63	187.84	242.06	272.49	404.89	508.96	8.64	9.14
3MMV9316HX	155	490	980	132.14	197.46	254.13	285.96	426.23	536.07	8.13	8.64
3MMV9317HX	200	625	1245	144.52	215.48	277.74	313.42	463.66	582.59	9.14	10.16
3MMV9318HX	200	625	1245	148.32	220.72	283.69	319.72	475.73	598.51	9.14	9.65
3MMV9319HX	200	625	1245	155.70	231.57	297.33	334.58	499.86	629.12	8.64	9.14
3MMV9320HX	245	735	1465	170.75	251.16	323.04	369.04	540.62	679.84	9.14	10.16
3MMV9322HX	265	800	1600	183.82	270.40	348.05	397.55	581.89	731.61	9.14	10.16
3MMV9324HX	310	935	1870	198.51	291.73	374.99	427.46	628.07	790.37	10.16	11.18
3MMV9326HX	355	1065	2135	216.35	317.27	407.34	462.79	684.21	861.73	10.67	11.68
3MMV9328HX	400	1200	2400	235.07	344.90	443.02	504.06	743.15	935.54	10.67	12.19
3MMV9330HX	535	1600	3200	249.06	365.54	469.26	540.62	799.12	1006.55	13.72	15.24
	lbs.			10^6lbs./in.			10^6lbs./in.			in.	
INCH DUPLEX PERFORMANCE DATA 3MMV9300HX SERIES											
3MMV9300HX	5	10	20	0.163	0.211	0.275	0.344	0.432	0.540	.00011	.00016
3MMV9301HX	5	10	20	0.171	0.221	0.288	0.362	0.455	0.568	.00010	.00016
3MMV9302HX	5	15	30	0.195	0.290	0.378	0.416	0.599	0.749	.00016	.00018
3MMV9303HX	5	15	30	0.203	0.301	0.392	0.433	0.624	0.781	.00016	.00017
3MMV9304HX	10	25	50	0.279	0.389	0.506	0.594	0.804	1.006	.00018	.00022
3MMV9305HX	10	25	50	0.310	0.431	0.559	0.661	0.898	1.124	.00016	.00020
3MMV9306HX	10	25	50	0.339	0.471	0.609	0.725	0.986	1.236	.00014	.00018
3MMV9307HX	15	40	80	0.426	0.606	0.787	0.910	1.262	1.580	.00020	.00022
3MMV9308HX	15	50	100	0.404	0.618	0.797	0.883	1.336	1.677	.00028	.00028
3MMV9309HX	20	55	110	0.476	0.682	0.880	1.044	1.474	1.851	.00024	.00028
3MMV9310HX	20	60	120	0.506	0.746	0.962	1.107	1.613	2.025	.00026	.00028
3MMV9311HX	25	75	150	0.567	0.836	1.079	1.239	1.805	2.267	.00028	.00032
3MMV9312HX	25	75	150	0.599	0.882	1.137	1.307	1.909	2.398	.00026	.00030
3MMV9313HX	25	75	150	0.630	0.927	1.193	1.372	2.009	2.526	.00026	.00028
3MMV9314HX	35	110	220	0.699	1.047	1.349	1.518	2.253	2.831	.00034	.00036
3MMV9315HX	35	110	220	0.718	1.074	1.384	1.558	2.315	2.910	.00034	.00036
3MMV9316HX	35	110	220	0.756	1.129	1.453	1.635	2.437	3.065	.00032	.00034
3MMV9317HX	45	140	280	0.826	1.232	1.588	1.792	2.651	3.331	.00036	.00040
3MMV9318HX	45	140	280	0.848	1.262	1.622	1.828	2.720	3.422	.00036	.00038
3MMV9319HX	45	140	280	0.890	1.324	1.700	1.913	2.858	3.597	.00034	.00036
3MMV9320HX	55	165	330	0.976	1.436	1.847	2.110	3.091	3.887	.00036	.00040
3MMV9322HX	60	180	360	1.051	1.546	1.990	2.273	3.327	4.183	.00036	.00040
3MMV9324HX	70	210	420	1.135	1.668	2.144	2.444	3.591	4.519	.00040	.00044
3MMV9326HX	80	240	480	1.237	1.814	2.329	2.646	3.912	4.927	.00042	.00046
3MMV9328HX	90	270	540	1.344	1.972	2.533	2.882	4.249	5.349	.00042	.00048
3MMV9330HX	120	360	720	1.424	2.090	2.683	3.091	4.569	5.755	.00054	.00060

Notes: (1) For DB or DF arrangements only. For other mounting arrangements contact your Timken representative.

ULTRA-LIGHT 2MMV9300HX (ISO 19) SERIES

SPEED CAPABILITY DATA

Bearing Number	Grease Capacity NBU15 25%	Grease Capacity NBU15 40%	Kluber Isoflex NBU15 15%	Kluber Isoflex NBU15 20%	Operating Speeds[2] (DB Mounting)[1] Grease DUL	Grease DUM	Grease DUH	Oil DUL	Oil DUM	Oil DUH
	grams	grams	grams	grams	RPM	RPM	RPM	RPM	RPM	RPM
2MMV9300HX	0.11	0.18	0.06	0.09	73360	55020	36680	123795	93534	62310
2MMV9301HX	0.13	0.20	0.07	0.11	64000	48000	32000	108000	81600	54360
2MMV9302HX	0.20	0.33	0.12	0.17	53440	40080	26720	90180	68136	45391
2MMV9303HX	0.23	0.36	0.12	0.18	48320	36240	24160	81540	61608	41042
2MMV9304HX	0.48	0.71	0.25	0.39	40160	30120	20080	67770	51204	34111
2MMV9305HX	0.48	0.83	0.29	0.44	33440	25080	16720	56430	42636	28403
2MMV9306HX	0.60	0.95	0.34	0.51	28720	21540	14360	48465	36618	24394
2MMV9307HX	0.95	1.43	0.51	0.77	24400	18300	12200	41175	31110	20725
2MMV9308HX	1.43	2.26	0.8	1.22	22400	16800	11200	37800	28560	19026
2MMV9309HX	1.55	2.50	0.88	1.34	20000	15000	10000	33750	25500	16988
2MMV9310HX	1.67	2.74	0.95	1.44	18320	13740	9160	30915	23358	15561
2MMV9311HX	2.26	3.57	1.3	1.93	16560	12420	8280	27945	21114	14066
2MMV9312HX	2.38	3.81	1.4	2.05	15360	11520	7680	25920	19584	13046
2MMV9313HX	2.50	4.05	1.4	2.16	14240	10680	7120	24030	18156	12095
2MMV9314HX	4.29	6.79	2.4	3.64	13120	9840	6560	22140	16728	11144
2MMV9315HX	4.52	7.26	2.5	3.86	12320	9240	6160	20790	15708	10464
2MMV9316HX	4.76	7.62	2.7	3.98	11600	8700	5800	19575	14790	9853
2MMV9317HX	6.31	10.24	3.6	5.45	10800	8100	5400	18225	13770	9173
2MMV9318HX	7.02	11.19	3.9	5.91	10320	7740	5160	17415	13158	8766
2MMV9319HX	7.26	11.55	4.1	6.14	9840	7380	4920	16605	12546	8358
2MMV9320HX	8.93	14.29	5	7.61	9120	6840	4560	15390	11628	7746
2MMV9322HX	9.64	15.48	5.4	8.30	8,400	6300	4200	14175	10710	7135
2MMV9324HX	13.21	21.19	7.4	11.25	7680	5760	3840	12960	9792	6523
2MMV9326HX	17.38	27.74	9.7	14.77	7088	5316	3540	11960	9037	6020
2MMV9328HX	18.45	29.52	10.4	15.68	6616	4962	3300	11165	8435	5619
2MMV9330HX	29.52	47.26	16.6	25.11	6168	4626	3080	10410	7864	5239

[1] For other mounting arrangement configurations refer to the engineering section on Permissible Speed calculation methods.
[2] For ceramic ball complements use 120% of speeds shown.

ULTRA-LIGHT 3MMV9300HX (ISO 19) SERIES

SPEED CAPABILITY DATA

Bearing Number	Grease Capacity NBU15		Kluber Isoflex NBU15		Operating Speeds[2] (DB Mounting)[1]					
	25%	40%	15%	20%	DUL	Grease DUM	DUH	DUL	Oil DUM	DUH
	grams	grams	grams	grams	RPM	RPM	RPM	RPM	RPM	RPM
3MMV9300HX	0.11	0.18	0.06	0.08	66080	49560	33040	111510	84250	56125
3MMV9301HX	0.13	0.20	0.07	0.10	57600	43200	28800	97200	73440	48900
3MMV9302HX	0.20	0.33	0.12	0.15	48080	36060	24040	81135	61300	40850
3MMV9303HX	0.23	0.36	0.12	0.16	43440	32580	21720	73305	55390	36900
3MMV9304HX	0.48	0.71	0.25	0.34	36160	27120	18080	61020	46100	30700
3MMV9305HX	0.48	0.83	0.29	0.39	30080	22560	15040	50760	38350	25550
3MMV9306HX	0.60	0.95	0.34	0.45	25840	19380	12920	43605	32950	21950
3MMV9307HX	0.95	1.43	0.51	0.69	22000	16500	11000	37125	28050	18690
3MMV9308HX	1.43	2.26	0.8	1.08	20160	15120	10080	34020	25700	17125
3MMV9309HX	1.55	2.50	0.88	1.19	18000	13500	9000	30375	22950	15290
3MMV9310HX	1.67	2.74	0.95	1.28	16480	12360	8240	27810	21000	14000
3MMV9311HX	2.26	3.57	1.3	1.72	14960	11220	7480	25245	19075	12700
3MMV9312HX	2.38	3.81	1.4	1.82	13760	10320	6880	23220	17500	11690
3MMV9313HX	2.50	4.05	1.4	1.92	12800	9600	6400	21600	16320	10875
3MMV9314HX	4.29	6.79	2.4	3.23	11840	8880	5920	19980	15100	10060
3MMV9315HX	4.52	7.26	2.5	3.43	11120	8340	5560	18765	14175	9450
3MMV9316HX	4.76	7.62	2.7	3.54	10480	7860	5240	17685	13360	8900
3MMV9317HX	6.31	10.24	3.6	4.85	9680	7260	4840	16335	12350	8225
3MMV9318HX	7.02	11.19	3.9	5.25	9280	6960	4640	15660	11825	7880
3MMV9319HX	7.26	11.55	4.1	5.45	8800	6600	4400	14850	11220	7475
3MMV9320HX	8.93	14.29	5	6.77	8240	6180	4120	13905	10500	7000
3MMV9322HX	9.64	15.48	5.4	7.37	7544	5658	3772	12731	9620	6400
3MMV9324HX	13.21	21.19	7.4	10.00	6912	5184	3456	11664	8810	5875
3MMV9326HX	17.38	27.74	9.7	13.13	6376	4782	3188	10760	8130	5415
3MMV9328HX	18.45	29.52	10.4	13.94	5960	4470	2980	10058	7600	5050
3MMV9330HX	29.52	47.26	16.6	22.32	5552	4164	2776	9369	7080	4710

[1] For other mounting arrangement configurations refer to the engineering section on Permissible Speed calculation methods.
[2] For ceramic ball complements use 120% of speeds shown.

EXTRA-LIGHT 2(3)MMV99100WN (ISO 10) SERIES

DIMENSIONAL SERIES METRIC

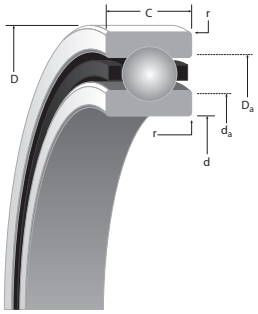

SUPER PRECISION MM:

Running accuracy and performance meet ABEC 9 (ISO P2) levels. Non-critical features conform to ABEC 7 (ISO P4) requirements.

WN CONSTRUCTION:

- Incorporates low shoulder on non-thrust side of outer and inner rings.
- Maximum complement of balls separated by one-piece cage piloted against a ground thrust shoulder land of the outer ring.

Bearing Number						(2MM) LOAD RATINGS (steel ball & ceramic ball)			(3MM) LOAD RATINGS (steel ball & ceramic ball)		
2MM or 3MM	d Bore	D O.D.	C Width(1)	Ball Qty. x Dia.	Wt.	C_o (stat)	C_e (dyn)	Limiting Speed(Ng)	C_o (stat)	C_e (dyn)	Limiting Speed(Ng)
METRIC	mm/tol: +0; -(µm)			mm	kg.	N		RPM	N		RPM
99101WN	12 (4)	28 (5)	8 (80)	9 x 4.76	0.019	1740 1550	4540 4540	75800 90960	1670 1490	4360 4360	68200 81840
99102WN	15 (4)	32 (6)	9 (80)	11 x 4.76	0.028	2240 1990	5220 5220	64300 77160	2140 1900	5000 5000	57900 69480
99103WN	17 (4)	35 (6)	10 (80)	13 x 4.76	0.038	2510 2230	5530 5530	56900 68280	2400 2140	5280 5280	51200 61440
99104WN	20 (5)	42 (6)	12 (120)	11 x 6.35	0.064	4690 4180	9760 9760	43800 52200	4470 3980	9310 9310	39400 47280
99105WN	25 (5)	47 (6)	12 (120)	13 x 6.35	0.074	5800 5160	10900 10900	36500 43800	5510 4900	10300 10300	32900 39480
99106WN	30 (5)	55 (7)	13 (120)	16 x 6.35	0.116	7460 6640	12300 12300	29500 35400	7060 6280	11600 11600	26600 31920
99107WN	35 (6)	62 (7)	14 (120)	21 x 5.56	0.167	7840 6980	11100 11100	25300 30360	7440 6620	10500 10500	22800 27360
99108WN	40 (6)	68 (7)	15 (120)	24 x 5.56	0.207	9150 8140	11900 11900	22000 26400	8590 7650	11200 11200	19800 23760
99109WN	45 (6)	75 (7)	16 (120)	23 x 6.35	0.259	11400 10200	14800 14800	20200 24240	10700 9560	14000 14000	18200 21840
99110WN	50 (6)	80 (7)	16 (120)	25 x 6.35	0.281	12500 11100	15400 15400	18500 22200	11700 10400	14500 14500	16700 20040
99111WN	55 (7)	90 (8)	18 (150)	25 x 7.14	0.417	15800 14100	19100 19100	16600 19920	14800 13200	18000 18000	14900 17880
99112WN	60 (7)	95 (8)	18 (150)	26 x 7.14	0.445	16400 14600	19300 19300	15400 18480	15300 13600	18200 18200	13900 16680
99113WN	65 (7)	100 (8)	18 (150)	28 x 7.14	0.474	17600 15700	20000 20000	14400 17280	16400 14600	18800 18800	13000 15600
99114WN	70 (7)	110 (8)	20 (150)	28 x 7.94	0.665	21700 19300	24300 24300	13200 15840	20300 18000	22900 22900	11900 14280
99115WN	75 (7)	115 (8)	20 (150)	30 x 7.94	0.699	23100 20600	25000 25000	12300 14760	21600 19200	23500 23500	11100 13320
99116WN	80 (7)	125 (9)	22 (150)	29 x 8.73	0.944	27200 24200	29300 29300	11600 13920	25300 22500	27500 27500	10400 12480
99117WN	85 (8)	130 (9)	22 (200)	31 x 8.73	0.991	28900 25700	30200 30200	11000 13200	26900 23900	28400 28400	9900 11880
99118WN	90 (8)	140 (9)	24 (200)	28 x 10.32	1.266	36100 32700	39000 39000	10400 12480	34400 30600	36800 36800	9400 11280
99119WN	95 (8)	145 (9)	24 (200)	29 x 10.32	1.303	37900 33800	39600 39600	9900 11880	35400 31500	37300 37300	8900 10680
99120WN	100 (8)	150 (9)	24 (200)	31 x 10.32	1.374	40400 35900	40900 40900	9400 11280	37700 33600	38500 38500	8500 10200
99121WN	105 (8)	160 (10)	26 (200)	30 x 11.11	1.729	45400 40400	45900 45900	8900 10680	42400 37800	43400 43400	8000 9600
99122WN	110 (8)	170 (10)	28 (200)	30 x 11.91	2.188	52100 46400	52200 52200	8500 10200	48800 43400	49300 49300	7700 8880
99124WN	120 (8)	180 (10)	28 (200)	32 x 11.91	2.343	55200 49200	53500 53500	7900 9480	51700 46000	50600 50600	7100 8520
99126WN	130 (10)	200 (11)	33 (250)	32 x 13.49	3.563	71200 63400	67500 67500	7100 8520	66600 59200	63700 63700	6400 7680
99128WN	140 (10)	210 (11)	33 (250)	34 x 13.49	3.776	75200 67000	69300 69300	6600 7920	70300 62600	65300 65300	5900 7080
99130WN	150 (10)	225 (11)	35 (250)	34 x 15.08	4.509	91500 81400	83800 83800	6200 7440	85600 76200	79100 79100	5600 6720

(Ng) For a single, grease lubricated, spring preloaded bearing. This value to be used in permissible Operating Speed (Sp) calculation.
(1) Width tolerance of preloaded bearing set +0/-0.25 mm (+0/-0.010").
(2) ABMA STD 20 (r_{as} max).

r Rad.(2)	Suggested Shoulder Diameters d_a (Shaft) Max.	d_a (Shaft) Min.	D_a (Housing) Max.	D_a (Housing) Min.	Shaft Diameter Min.	Shaft Diameter Max.	Mounting Fits Loose	Mounting Fits Tight	FIXED Housing Bore (Stationary) Min.	FIXED Housing Bore (Stationary) Max.	FIXED Mounting Fits Tight	FIXED Mounting Fits Loose	FLOATING Housing Bore (Stationary) Max.	FLOATING Housing Bore (Stationary) Min.	FLOATING Housing Clearance Max.	FLOATING Housing Clearance Min.	Bearing Number 2MM or 3MM
mm	mm	mm	mm	mm	mm	mm	mm	mm	mm	mm	mm	mm	mm	mm	mm	mm	
0.3	15.64	15.44	24.56	24.36	11.995	12.000	0.005	0.004	28	28.005	0.0000	0.010	28.010	28.005	0.015	0.005	99101WN
0.3	19.14	18.94	28.06	27.86	14.995	15.000	0.005	0.004	32	32.005	0.0000	0.011	32.010	32.005	0.016	0.005	99102WN
0.3	21.64	21.44	30.56	30.36	16.995	17.000	0.005	0.004	35	35.006	0.0000	0.012	35.010	35.005	0.016	0.005	99103WN
0.6	25.05	24.85	37.15	36.95	19.995	20.000	0.005	0.005	42	42.006	0.0000	0.012	42.010	42.005	0.016	0.005	99104WN
0.6	30.05	29.85	42.15	41.95	24.995	25.000	0.005	0.005	47	47.006	0.0000	0.012	47.012	47.007	0.018	0.007	99105WN
1	36.55	36.35	48.65	48.45	29.995	30.000	0.005	0.005	55	55.008	0.0000	0.015	55.012	55.007	0.019	0.007	99106WN
1	43.34	43.14	53.86	53.66	34.995	35.000	0.005	0.006	62	62.008	0.0000	0.015	62.012	62.007	0.019	0.007	99107WN
1	48.84	48.64	59.36	59.16	39.995	40.000	0.005	0.006	68	68.008	0.0000	0.015	68.012	68.007	0.019	0.007	99108WN
1	54.05	53.85	66.15	65.95	44.995	45.000	0.005	0.006	75	75.008	0.0000	0.015	75.014	75.009	0.022	0.009	99109WN
1	59.05	58.85	71.15	70.95	49.995	50.000	0.005	0.006	80	80.008	0.0000	0.015	80.012	80.008	0.020	0.008	99110WN
1	65.76	65.56	79.44	79.24	54.995	55.000	0.005	0.007	90	90.008	0.0000	0.016	90.015	90.007	0.023	0.007	99111WN
1	70.76	70.56	84.44	84.24	59.995	60.000	0.005	0.007	95	95.008	0.0000	0.016	95.016	95.009	0.024	0.009	99112WN
1	75.76	75.56	89.44	89.24	64.995	65.000	0.005	0.007	100	100.008	0.0000	0.016	100.016	100.009	0.024	0.009	99113WN
1	82.46	82.26	97.74	97.54	69.995	70.000	0.005	0.007	110	110.008	0.0000	0.016	110.018	110.010	0.025	0.010	99114WN
1	87.46	87.26	102.74	102.54	74.995	75.005	0.005	0.012	115	115.008	0.0000	0.016	115.019	115.011	0.026	0.010	99115WN
1	94.17	93.97	111.03	110.83	79.995	80.005	0.005	0.012	125	125.008	0.0000	0.017	125.021	125.011	0.030	0.011	99116WN
1	99.17	98.97	116.03	115.83	84.995	85.005	0.005	0.012	130	130.009	0.0000	0.018	130.020	130.010	0.029	0.010	99117WN
1.5	105.08	104.88	125.12	124.92	89.995	90.005	0.005	0.013	140	140.009	0.0000	0.018	140.020	140.010	0.029	0.010	99118WN
1.5	110.08	109.88	130.12	129.92	94.995	95.005	0.005	0.013	145	145.009	0.0000	0.018	145.021	145.011	0.030	0.011	99119WN
1.5	115.08	114.88	135.12	134.92	99.995	100.005	0.005	0.013	150	150.009	0.0000	0.018	150.023	150.012	0.032	0.012	99120WN
2	121.79	121.59	143.41	143.21	104.995	105.005	0.005	0.013	160	160.009	0.0000	0.022	160.022	160.012	0.033	0.012	99121WN
2	128.49	128.29	151.71	151.51	109.995	110.005	0.005	0.013	170	170.010	0.0000	0.020	170.022	170.012	0.032	0.012	99122WN
2	138.49	138.29	161.71	161.51	119.995	120.005	0.005	0.013	180	180.010	0.0000	0.020	180.022	180.012	0.032	0.012	99124WN
2	151.91	151.71	178.29	178.09	129.995	130.005	0.005	0.015	200	200.011	0.0000	0.022	200.025	200.015	0.036	0.015	99126WN
2	161.91	161.71	188.29	188.09	139.995	140.005	0.005	0.015	210	210.011	0.0000	0.022	210.025	210.015	0.036	0.015	99128WN
2	172.82	172.62	202.38	202.18	149.995	150.005	0.005	0.015	225	225.011	0.0000	0.022	225.025	225.015	0.036	0.015	99130WN

EXTRA-LIGHT 2(3)MMV99100WN (ISO 10) SERIES

DIMENSIONAL SERIES INCHES

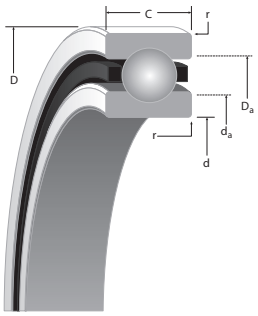

SUPER PRECISION MM:

Running accuracy and performance meet ABEC 9 (ISO P2) levels. Non-critical features conform to ABEC 7 (ISO P4) requirements.

WN CONSTRUCTION:

- Incorporates low shoulder on non-thrust side of outer and inner rings.
- Maximum complement of balls separated by one-piece cage piloted against a ground thrust shoulder land of the outer ring.

Bearing Number						(2MM) LOAD RATINGS (steel ball & ceramic ball)			(3MM) LOAD RATINGS (steel ball & ceramic ball)		
2MM or 3MM	d Bore	D O.D.	C Width(1)	Ball Qty. x Dia.	Wt.	C_o (stat)	C_e(dyn)	Limiting Speed(Ng)	C_o (stat)	C_e(dyn)	Limiting Speed(Ng)
INCH	in/tol: +0; -.000(µm)			in.	lbs.	lbs.		RPM	lbs.		RPM
99101WN	0.4724 (1.5)	1.1024 (2)	0.315 (31)	9 x 3/16	0.04	390 360	1020 1020	75800 90960	380 340	980 980	68200 81840
99102WN	0.5906 (1.5)	1.2598 (2.5)	0.3543 (31)	11 x 3/16	0.06	500 450	1170 1170	64300 77160	480 430	1120 1120	57900 69480
99103WN	0.6693 (1.5)	1.378 (2.5)	0.3937 (31)	13 x 3/16	0.08	560 500	1240 1240	56900 68280	540 480	1190 1190	51200 61440
99104WN	0.7874 (2)	1.6535 (2.5)	0.4724 (47)	11 x 1/4	0.14	1050 940	2190 2190	43800 52560	1000 890	2090 2090	39400 47280
99105WN	0.9843 (2)	1.8504 (2.5)	0.4724 (47)	13 x 1/4	0.16	1300 1160	2450 2450	36500 43800	1240 1100	2330 2330	32900 39480
99106WN	1.1811 (2)	2.1654 (3)	0.5118 (47)	16 x 1/4	0.25	1680 1490	2770 2770	29500 35400	1590 1410	2620 2620	26600 31920
99107WN	1.378 (2.5)	2.4409 (3)	0.5512 (47)	21 x 7/32	0.37	1760 1570	2510 2510	25300 30360	1670 1490	2360 2360	22800 27360
99108WN	1.5748 (2.5)	2.6772 (3)	0.5906 (47)	24 x 7/32	0.46	2060 1830	2670 2670	22000 26400	1930 1720	2510 2510	19800 23760
99109WN	1.7717 (2.5)	2.9528 (3)	0.6299 (47)	23 x 1/4	0.57	2570 2280	3340 3340	20200 24240	2410 2150	3140 3140	18200 21840
99110WN	1.9685 (2.5)	3.1496 (3)	0.6299 (47)	25 x 1/4	0.62	2810 2500	3470 3470	18500 22200	2630 2340	3260 3260	16700 20040
99111WN	2.1654 (3)	3.5433 (3)	0.7087 (59)	25 x 9/32	0.92	3550 3160	4290 4290	16600 19920	3330 2960	4040 4040	14900 17880
99112WN	2.3622 (3)	3.7402 (3)	0.7087 (59)	26 x 9/32	0.98	3700 3290	4340 4340	15400 18480	3440 3060	4080 4080	13900 16680
99113WN	2.5591 (3)	3.937 (3)	0.7087 (59)	28 x 9/32	1.05	3960 3520	4500 4500	14400 17280	3680 3280	4230 4230	13000 15600
99114WN	2.7559 (3)	4.3307 (3)	0.7874 (59)	28 x 5/16	1.47	4890 4350	5450 5540	13200 15840	4569 4060	5140 5140	11900 14280
99115WN	2.9528 (3)	4.5276 (3)	0.7874 (59)	30 x 5/16	1.54	5200 4630	5620 5620	12300 14760	4850 4320	5290 5290	11100 13320
99116WN	3.1496 (3)	4.9213 (3.5)	0.8661 (59)	29 x 11/32	2.08	6110 5440	6580 6580	11600 13920	5690 5070	6190 6190	10400 12480
99117WN	3.3465 (3)	5.1181 (3.5)	0.8661 (79)	31 x 11/32	2.18	6490 5770	6780 6780	11000 13200	6040 5380	6380 6380	9900 11880
99118WN	3.5433 (3)	5.5118 (3.5)	0.9449 (79)	28 x 13/32	2.79	8270 7360	8780 8780	10400 13480	7720 6870	8280 8280	9400 11280
99119WN	3.7402 (3)	5.7087 (3.5)	0.9449 (79)	29 x 13/32	2.87	8530 7590	8890 8890	9900 11880	7970 7090	8390 8390	8900 10680
99120WN	3.937 (3)	5.9055 (3.5)	0.9449 (79)	31 x 13/32	3.03	9070 8080	9190 9190	9400 11280	8480 7540	8660 8660	8500 10200
99121WN	4.1339 (3)	6.2992 (4)	1.0236 (79)	30 x 7/16	3.81	10200 9080	10300 10300	8900 10680	9540 8490	9750 9750	8000 9600
99122WN	4.3307 (3)	6.6929 (4)	1.1024 (79)	30 x 15/32	4.82	11700 10400	11700 11700	8500 10200	11000 9760	11100 11100	7700 8880
99124WN	4.7244 (3)	7.0866 (4)	1.1024 (79)	32 x 15/32	5.17	12400 11100	12000 12000	7900 9480	11600 10300	11400 11400	7100 8520
99126WN	5.1181 (4)	7.874 (4.5)	1.2992 (98)	32 x 17/32	7.85	16000 14300	15200 15200	7100 8520	15000 13300	14300 14300	6400 7680
99128WN	5.5118 (4)	8.2677 (4.5)	1.2992 (98)	34 x 17/32	8.32	16900 15100	15600 15600	6600 7920	15800 14100	14700 14700	5900 7080
99130WN	5.9055 (4)	8.8583 (4.5)	1.378 (98)	34 x 19/32	9.94	20600 18300	18800 18800	6200 7440	19300 17100	17800 17800	5600 6720

(Ng) For a single, grease lubricated, spring preloaded bearing. This value to be used in permissible Operating Speed (Sp) calculation.
(1) Width tolerance of preloaded bearing set +0/-0.25 mm (+0/-0.010").
(2) ABMA STD 20 (r_{as} max).

r Rad.(2)	Suggested Shoulder Diameters d_a (Shaft) Max.	d_a (Shaft) Min.	D (Housing) Max.	D (Housing) Min.	Shaft Diameter Min.	Shaft Diameter Max.	Mounting Fits Loose	Mounting Fits Tight	FIXED Housing Bore (Stationary) Min.	FIXED Housing Bore (Stationary) Max.	FIXED Mounting Fits Tight	FIXED Mounting Fits Loose	FLOATING Housing Bore (Stationary) Max.	FLOATING Housing Bore (Stationary) Min.	FLOATING Housing Clearance Max.	FLOATING Housing Clearance Min.	Bearing Number 2MM or 3MM
in.	in.	in.	in.	in.	in.	in.	in.	in.	in.	in.	in.	in.	in.	in.	in.	in.	
0.012	0.62	0.61	0.99	0.98	0.4722	0.4724	0.0002	0.00015	1.1024	1.1026	0.0000	0.0004	1.1028	1.1026	0.0006	0.0002	99101WN
0.012	0.76	0.75	1.13	1.12	0.5904	0.5906	0.0002	0.00015	1.2598	1.2600	0.0000	0.00045	1.2602	1.2600	0.0007	0.0002	99102WN
0.012	0.86	0.85	1.23	1.22	0.6691	0.6693	0.0002	0.00015	1.3780	1.3783	0.0000	0.0005	1.3784	1.3782	0.0007	0.0002	99103WN
0.024	0.99	0.98	1.49	1.48	0.7872	0.7874	0.0002	0.00020	1.6535	1.6538	0.0000	0.0005	1.6539	1.6537	0.0007	0.0002	99104WN
0.024	1.19	1.18	1.69	1.68	0.9841	0.9843	0.0002	0.00020	1.8504	1.8507	0.0000	0.0005	1.8509	1.8507	0.0008	0.0003	99105WN
0.039	1.44	1.43	1.94	1.93	1.1809	1.1811	0.0002	0.00020	2.1654	2.1657	0.0000	0.0006	2.1659	2.1657	0.0008	0.0003	99106WN
0.039	1.71	1.70	2.15	2.14	1.3778	1.378	0.0002	0.00025	2.4409	2.4412	0.0000	0.0006	2.4414	2.4412	0.0008	0.0003	99107WN
0.039	1.93	1.92	2.36	2.35	1.5746	1.5748	0.0002	0.00025	2.6772	2.6775	0.0000	0.0006	2.6777	2.6775	0.0008	0.0003	99108WN
0.039	2.13	2.12	2.63	2.62	1.7715	1.7717	0.0002	0.00025	2.9528	2.9531	0.0000	0.0006	2.9533	2.9531	0.0008	0.0003	99109WN
0.039	2.33	2.32	2.83	2.82	1.9683	1.9685	0.0002	0.00025	3.1496	3.1499	0.0000	0.0006	3.1501	3.1499	0.0008	0.0003	99110WN
0.039	2.59	2.58	3.16	3.15	2.1652	2.1654	0.0002	0.00030	3.5433	3.5436	0.0000	0.0006	3.5439	3.5436	0.0009	0.0003	99111WN
0.039	2.79	2.78	3.35	3.34	2.362	2.3622	0.0002	0.00030	3.7402	3.7405	0.0000	0.0006	3.7408	3.7405	0.0009	0.0003	99112WN
0.039	2.99	2.98	3.55	3.54	2.5589	2.5591	0.0002	0.00030	3.9370	3.9373	0.0000	0.0006	3.9377	3.9374	0.0010	0.0004	99113WN
0.039	3.25	3.24	3.88	3.87	2.7557	2.7559	0.0002	0.00030	4.3307	4.3310	0.0000	0.0006	4.3314	4.3311	0.0010	0.0004	99114WN
0.039	3.45	3.44	4.07	4.06	2.9526	2.9530	0.0002	0.00050	4.5276	4.5279	0.0000	0.0006	4.5283	4.5280	0.0010	0.0004	99115WN
0.039	3.71	3.70	4.40	4.39	3.1494	3.1498	0.0002	0.00050	4.9213	4.9216	0.0000	0.0007	4.9221	4.9217	0.0012	0.0004	99116WN
0.039	3.91	3.90	4.60	4.59	3.3463	3.3467	0.0002	0.00050	5.1181	5.1185	0.0000	0.0007	5.1189	5.1185	0.0011	0.0004	99117WN
0.059	4.14	4.13	4.95	4.94	3.5431	3.5435	0.0002	0.00050	5.5118	5.5122	0.0000	0.0007	5.5126	5.5122	0.0011	0.0004	99118WN
0.059	4.34	4.33	5.15	5.14	3.7400	3.7404	0.0002	0.00050	5.7087	5.7091	0.0000	0.0007	5.7095	5.7091	0.0011	0.0004	99119WN
0.059	4.54	4.53	5.35	5.34	3.9368	3.9372	0.0002	0.00050	5.9055	5.9059	0.0000	0.0007	5.9064	5.9060	0.0012	0.0005	99120WN
0.079	4.80	4.79	5.67	5.66	4.1337	4.1341	0.0002	0.00050	6.2992	6.2996	0.0000	0.0008	6.3001	6.2997	0.0013	0.0005	99121WN
0.079	5.06	5.05	6.00	5.99	4.3305	4.3309	0.0002	0.00050	6.6929	6.6933	0.0000	0.0008	6.6938	6.6934	0.0013	0.0005	99122WN
0.079	5.46	5.45	6.39	6.38	4.7242	4.7246	0.0002	0.00050	7.0866	7.0870	0.0000	0.0008	7.0875	7.0871	0.0013	0.0005	99124WN
0.079	5.98	5.97	7.05	7.04	5.1179	5.1183	0.0002	0.00060	7.8740	7.8745	0.0000	0.0009	7.8750	7.8746	0.0015	0.0006	99126WN
0.079	6.38	6.37	7.44	7.43	5.5116	5.512	0.0002	0.00060	8.2677	8.2682	0.0000	0.0009	8.2687	8.2683	0.0015	0.0006	99128WN
0.079	6.81	6.80	8.00	7.99	5.9053	5.9057	0.0002	0.00060	8.8583	8.8588	0.0000	0.0009	8.8593	8.8589	0.0015	0.0006	99130WN

EXTRA-LIGHT 2MMV99100WN (ISO 10) SERIES

DUPLEX PERFORMANCE DATA

MOUNTING ARRANGEMENTS

Suggested
DB

Tandem
DT

Special Applications
DF

Bearing Number	PRELOAD				AXIAL STIFFNESS[1]				RADIAL STIFFNESS[1]			SPACER OFFSETS[1]		
	DUX	DUL	DUM	DUH	X-light	Light	Medium	Heavy	Light	Medium	Heavy	X-Light to Light	Light to Medium	Medium to Heavy
	N (= lbs x 4.448)				N/µm (= 10^6 lbs/in x 175.12)				N/µm (= 10^6 lbs/in x 175.12)			µm		
METRIC DUPLEX PERFORMANCE DATA 2MMV99100WN SERIES														
2MMV99101WN	-	20	40	90	-	13.47	17.84	24.14	60.69	78.71	99.52	—	5.59	8.38
2MMV99102WN	-	20	40	90	-	15.22	20.11	27.11	89.72	113.86	139.92	—	5.08	7.62
2MMV99103WN	-	20	40	90	-	16.97	22.21	29.73	99.69	127.15	156.71	—	4.57	6.86
2MMV99104WN	20	40	90	180	17.14	22.39	29.91	40.75	125.75	155.84	195.54	4.57	6.86	10.16
2MMV99105WN	20	70	130	270	21.51	29.21	39.18	53.87	140.09	174.20	218.97	5.59	7.87	11.43
2MMV99106WN	20	70	130	270	24.49	33.06	44.07	60.17	173.50	220.20	276.52	4.83	6.86	10.16
2MMV99107WN	40	90	180	360	33.41	44.07	59.12	81.15	209.71	269.00	337.03	4.57	6.86	10.16
2MMV99108WN	70	110	220	440	39.00	52.12	70.13	96.72	247.13	312.37	391.25	5.08	7.37	10.67
2MMV99109WN	70	130	270	530	41.45	54.74	73.81	101.79	279.67	352.95	441.80	5.59	8.38	12.19
2MMV99110WN	70	130	270	530	43.55	57.54	77.31	106.34	295.41	373.24	467.51	5.33	7.87	11.68
2MMV99111WN	90	180	360	710	51.07	67.16	90.25	124.35	349.45	440.40	550.94	6.10	9.14	13.21
2MMV99112WN	90	180	360	710	52.30	68.74	92.35	126.80	358.55	452.29	565.80	5.84	8.89	12.95
2MMV99113WN	110	220	440	890	59.64	78.71	106.16	146.74	376.38	475.38	595.18	6.35	9.65	13.97
2MMV99114WN	110	220	440	890	62.26	81.68	109.14	149.36	426.58	538.17	626.14	6.10	9.40	13.72
2MMV99115WN	130	270	530	1070	69.61	91.65	122.95	168.95	446.34	563.70	705.90	6.60	9.91	14.73
2MMV99116WN	160	310	620	1250	0.17	95.67	128.55	177.00	489.55	617.57	772.53	7.37	11.18	11.18
2MMV99117WN	180	360	710	1420	79.58	105.11	141.67	195.36	511.41	645.73	808.56	7.62	11.43	16.76
2MMV99118WN	200	400	800	1600	80.63	106.16	142.54	196.06	537.12	678.61	850.01	8.64	12.95	18.80
2MMV99119WN	200	400	800	1600	82.38	108.44	145.34	199.74	549.54	694.70	870.65	8.38	12.70	12.70
2MMV99120WN	220	440	890	1780	89.37	117.71	158.11	217.58	605.50	764.49	957.05	8.64	12.95	19.05
2MMV99121WN	240	490	980	1960	94.10	123.83	165.81	229.99	631.91	797.72	823.60	8.89	13.46	20.57
2MMV99122WN	270	530	1070	2140	99.87	131.00	175.07	244.34	642.58	813.11	1019.49	9.14	13.97	22.10
2MMV99124WN	310	620	1250	2490	110.19	144.99	194.31	264.45	724.26	914.03	1144.20	9.65	14.73	20.83
2MMV99126WN	400	800	1600	3200	121.56	160.21	215.30	292.43	810.49	1023.51	1281.67	11.43	17.02	23.88
2MMV99128WN	420	850	1690	3380	128.73	169.65	228.07	311.85	889.19	1121.46	1395.00	11.18	17.02	24.38
2MMV99130WN	440	890	1780	3560	135.20	177.35	236.99	323.74	937.99	1184.25	1490.15	11.43	17.02	25.40
	lbs.				10^6lbs./in.				10^6lbs./in.			in.		
INCH DUPLEX PERFORMANCE DATA 2MMV9100WN SERIES														
2MMV99101WN	—	5	10	20	—	0.077	0.102	0.138	0.347	0.450	0.569	—	0.00022	0.00033
2MMV99102WN	—	5	10	20	—	0.087	0.115	0.155	0.513	0.651	0.800	—	0.00020	0.00030
2MMV99103WN	—	5	10	20	—	0.097	0.127	0.170	0.570	0.727	0.896	—	0.00018	0.00027
2MMV99104WN	5	10	20	40	0.098	0.128	0.171	0.233	0.719	0.891	1.118	0.00018	0.00027	0.00040
2MMV99105WN	5	15	30	60	0.123	0.167	0.224	0.308	0.801	0.996	1.252	0.00022	0.00031	0.00045
2MMV99106WN	5	15	30	60	0.140	0.189	0.252	0.344	0.992	1.259	1.581	0.00019	0.00027	0.00040
2MMV99107WN	10	20	40	80	0.191	0.252	0.338	0.464	1.199	1.538	1.927	0.00018	0.00027	0.00040
2MMV99108WN	15	25	50	100	0.223	0.298	0.401	0.553	1.413	1.786	2.237	0.00020	0.00029	0.00042
2MMV99109WN	15	30	60	120	0.237	0.313	0.422	0.582	1.599	2.018	2.526	0.00022	0.00033	0.00048
2MMV99110WN	15	30	60	120	0.249	0.329	0.442	0.608	1.689	2.134	2.673	0.00021	0.00031	0.00046
2MMV99111WN	20	40	80	160	0.292	0.384	0.516	0.711	1.998	2.518	3.150	0.00024	0.00036	0.00052
2MMV99112WN	20	40	80	160	0.299	0.393	0.528	0.725	2.050	2.586	3.235	0.00023	0.00035	0.00051
2MMV99113WN	25	50	100	200	0.341	0.450	0.607	0.839	2.152	2.718	3.403	0.00025	0.00038	0.00055
2MMV99114WN	25	50	100	200	0.356	0.467	0.624	0.854	2.439	3.077	3.580	0.00024	0.00037	0.00054
2MMV99115WN	30	60	120	240	0.398	0.524	0.703	0.966	2.552	3.223	4.036	0.00026	0.00039	0.00058
2MMV99116WN	35	70	140	280	0.001	0.547	0.735	1.012	2.799	3.531	4.417	0.00029	0.00044	0.00044
2MMV99117WN	40	80	160	320	0.455	0.601	0.810	1.117	2.924	3.692	4.623	0.00030	0.00045	0.00066
2MMV99118WN	45	90	180	360	0.461	0.607	0.815	1.121	3.071	3.880	4.860	0.00034	0.00051	0.00074
2MMV99119WN	45	90	180	360	0.471	0.620	0.831	1.142	3.142	3.972	4.978	0.00033	0.00050	0.00050
2MMV99120WN	50	100	200	400	0.511	0.673	0.904	1.244	3.462	4.371	5.472	0.00034	0.00051	0.00075
2MMV99121WN	55	110	220	440	0.538	0.708	0.948	1.315	3.613	4.561	4.709	0.00035	0.00053	0.00081
2MMV99122WN	60	120	240	480	0.571	0.749	1.001	1.397	3.674	4.649	5.829	0.00036	0.00055	0.00087
2MMV99124WN	70	140	280	560	0.630	0.829	1.111	1.512	4.141	5.226	6.542	0.00038	0.00058	0.00082
2MMV99126WN	90	180	360	720	0.695	0.916	1.231	1.672	4.634	5.852	7.328	0.00045	0.00067	0.00094
2MMV99128WN	95	190	380	760	0.736	0.970	1.304	1.783	5.084	6.412	7.976	0.00044	0.00067	0.00096
2MMV99130WN	100	200	400	800	0.773	1.014	1.355	1.851	5.363	6.771	8.520	0.00045	0.00067	0.00100

Notes: [1] For DB or DF arrangements only. For other mounting arrangements contact your Timken representative.

EXTRA-LIGHT 3MMV99100HX (ISO 10) SERIES

DUPLEX PERFORMANCE DATA

MOUNTING ARRANGEMENTS

Suggested
DB

Tandem
DT

Special Applications
DF

Bearing Number	PRELOAD				AXIAL STIFFNESS[1]				RADIAL STIFFNESS[1]			SPACER OFFSETS[1]		
	DUX	DUL	DUM	DUH	X-light	Light	Medium	Heavy	Light	Medium	Heavy	X-Light to Light	Light to Medium	Medium to Heavy
	N				N/µm				N/µm			µm		
METRIC DUPLEX PERFORMANCE DATA 3MMV99100WN SERIES														
3MMV99101WN	—	40	90	180	—	35.85	46.00	59.99	58.77	75.03	92.52	—	4.32	6.60
3MMV99102WN	—	40	90	180	—	40.75	52.30	67.86	85.70	105.99	132.92	—	3.81	5.84
3MMV99103WN	—	40	90	180	—	45.30	58.07	75.21	95.50	118.41	148.84	—	3.30	5.33
3MMV99104WN	40	90	180	360	47.92	61.39	79.23	103.37	115.26	145.52	182.60	3.30	5.08	7.87
3MMV99105WN	70	130	270	530	61.74	79.05	102.49	134.32	128.55	162.83	204.46	3.81	5.84	8.89
3MMV99106WN	70	130	270	530	70.48	90.25	116.66	152.16	162.66	205.86	258.15	3.30	5.08	7.87
3MMV99107WN	90	180	360	710	90.07	115.61	149.89	196.76	200.79	253.26	317.09	3.56	5.33	8.13
3MMV99108WN	110	220	440	890	106.34	136.60	177.17	233.14	233.32	294.01	368.16	3.56	5.59	8.64
3MMV99109WN	130	270	530	1070	114.03	146.39	189.94	249.76	262.00	329.86	412.76	4.06	6.35	9.65
3MMV99110WN	130	270	530	1070	120.33	154.44	200.09	262.52	276.69	348.75	436.73	3.81	6.10	9.14
3MMV99111WN	180	360	710	1420	137.12	176.12	228.42	300.13	330.56	415.91	519.98	4.57	7.11	10.67
3MMV99112WN	180	360	710	1420	140.62	180.50	234.02	307.30	339.31	426.93	533.97	4.32	6.86	10.41
3MMV99113WN	220	440	890	1780	159.68	205.33	266.72	351.55	356.27	448.79	561.60	4.83	7.62	11.43
3MMV99114WN	220	440	890	1780	163.53	210.05	271.97	356.80	407.17	512.46	640.83	4.83	7.37	11.18
3MMV99115WN	270	530	1070	2220	182.42	234.54	304.33	406.99	426.23	536.77	671.62	5.08	7.87	12.95
3MMV99116WN	310	620	1250	2450	193.96	249.23	323.22	422.03	464.18	584.17	555.48	5.59	8.64	12.95
3MMV99117WN	360	710	1420	2670	212.33	273.02	354.52	454.91	485.00	610.93	764.31	5.84	9.14	12.19
3MMV99118WN	400	800	1600	3110	216.18	277.74	360.29	468.21	510.36	643.11	805.06	6.35	9.91	14.48
3MMV99119WN	400	800	1600	3110	221.25	284.04	368.16	478.00	522.43	658.50	824.48	6.35	9.91	14.22
3MMV99120WN	440	890	1780	3560	239.79	308.00	399.47	525.05	575.25	724.44	901.08	6.35	9.91	15.24
3MMV99121WN	490	980	2000	4000	246.61	316.74	414.34	544.99	603.75	760.12	955.48	6.86	11.18	16.51
3MMV99122WN	530	1070	2220	4450	259.55	333.18	438.47	576.30	617.75	779.00	980.49	7.11	11.94	17.53
3MMV99124WN	620	1250	2450	4890	285.79	367.29	473.28	622.47	695.40	875.20	1094.70	7.62	11.43	17.78
3MMV99126WN	800	1600	3110	6230	323.91	416.44	534.49	702.75	771.31	971.39	1211.71	8.64	12.70	20.07
3MMV99128WN	850	1690	3340	6670	343.33	441.27	569.82	749.27	845.82	1057.97	1323.29	8.64	12.95	20.07
3MMV99130WN	890	1780	3560	7120	352.25	451.94	585.39	767.81	900.39	1139.47	1425.44	8.89	13.72	21.08
	lbs.				10^6lbs./in.				10^6lbs./in.			in.		
INCH DUPLEX PERFORMANCE DATA 3MMV99100WN SERIES														
3MMV99101WN	—	10	20	40	—	0.205	0.263	0.343	0.336	0.429	0.529	—	0.00017	0.00026
3MMV99102WN	—	10	20	40	—	0.233	0.299	0.388	0.490	0.606	0.760	—	0.00015	0.00023
3MMV99103WN	—	10	20	40	—	0.259	0.332	0.430	0.546	0.677	0.851	—	0.00013	0.00021
3MMV99104WN	10	20	40	80	0.274	0.351	0.453	0.591	0.659	0.832	1.044	0.00013	0.0002	0.00031
3MMV99105WN	15	30	60	120	0.353	0.452	0.586	0.768	0.735	0.931	1.169	0.00015	0.00023	0.00035
3MMV99106WN	15	30	60	120	0.403	0.516	0.667	0.870	0.93	1.177	1.476	0.00013	0.0002	0.00031
3MMV99107WN	20	40	80	160	0.515	0.661	0.857	1.125	1.148	1.448	1.813	0.00014	0.00021	0.00032
3MMV99108WN	25	50	100	200	0.608	0.781	1.013	1.333	1.334	1.681	2.105	0.00014	0.00022	0.00034
3MMV99109WN	30	60	120	240	0.652	0.837	1.086	1.428	1.498	1.886	2.360	0.00016	0.00025	0.00038
3MMV99110WN	30	60	120	240	0.688	0.883	1.144	1.501	1.582	1.994	2.497	0.00015	0.00024	0.00036
3MMV99111WN	40	80	160	320	0.784	1.007	1.306	1.716	1.890	2.378	2.973	0.00018	0.00028	0.00042
3MMV99112WN	40	80	160	320	0.804	1.032	1.338	1.757	1.940	2.441	3.053	0.00017	0.00027	0.00041
3MMV99113WN	50	100	200	400	0.913	1.174	1.525	2.010	2.037	2.566	3.211	0.00019	0.0003	0.00045
3MMV99114WN	50	100	200	400	0.935	1.201	1.555	2.040	2.328	2.930	3.664	0.00019	0.00029	0.00044
3MMV99115WN	60	120	240	500	1.043	1.341	1.740	2.327	2.437	3.069	3.840	0.0002	0.00031	0.00051
3MMV99116WN	70	140	280	550	1.109	1.425	1.848	2.413	2.654	3.340	3.176	0.00022	0.00034	0.00051
3MMV99117WN	80	160	320	600	1.214	1.561	2.027	2.601	2.773	3.493	4.370	0.00023	0.00036	0.00048
3MMV99118WN	90	180	360	700	1.236	1.588	2.060	2.677	2.918	3.677	4.603	0.00025	0.00039	0.00057
3MMV99119WN	90	180	360	700	1.265	1.624	2.105	2.733	2.987	3.765	4.714	0.00025	0.00039	0.00056
3MMV99120WN	100	200	400	800	1.371	1.761	2.284	3.002	3.289	4.142	5.152	0.00025	0.00039	0.00060
3MMV99121WN	110	220	450	900	1.410	1.811	2.369	3.116	3.452	4.346	5.463	0.00027	0.00044	0.00065
3MMV99122WN	120	240	500	1000	1.484	1.905	2.507	3.295	3.532	4.454	5.606	0.00028	0.00047	0.00069
3MMV99124WN	140	280	550	1100	1.634	2.100	2.706	3.559	3.976	5.004	6.259	0.0003	0.00045	0.00070
3MMV99126WN	180	360	700	1400	1.852	2.381	3.056	4.018	4.410	5.554	6.928	0.00034	0.00050	0.00079
3MMV99128WN	190	380	750	1500	1.963	2.523	3.258	4.284	4.836	6.049	7.566	0.00034	0.00051	0.00079
3MMV99130WN	200	400	800	1600	2.014	2.584	3.347	4.390	5.148	6.515	8.150	0.00035	0.00054	0.00083

Notes: [1] For DB or DF arrangements only. For other mounting arrangements contact your Timken representative.

D

EXTRA-LIGHT 2MMV99100WN (ISO 10) SERIES

SPEED CAPABILITY DATA

Bearing Number	Grease Capacity NBU15		Kluber Isoflex NBU15		Operating Speeds[2] (DB Mounting)[1]					
	25%	40%	15%	20%	DUL	Grease DUM	DUH	DUL	Oil DUM	DUH
	grams	grams	grams	grams	RPM	RPM	RPM	RPM	RPM	RPM
2MMV99101WN	0.3	0.5	0.2	0.27	68200	60600	45500	116000	103000	77400
2MMV99102WN	0.4	0.6	0.24	0.32	57900	51400	38600	98400	98400	65600
2MMV99103WN	0.5	0.7	0.31	0.41	51200	45500	34100	87100	87100	58000
2MMV99104WN	0.9	1.4	0.58	0.77	39400	35000	26300	67000	67000	44700
2MMV99105WN	1	1.6	0.67	0.9	32900	29200	21900	55800	55800	37200
2MMV99106WN	1.3	2.1	0.87	1.17	26600	23600	17700	45100	45100	30100
2MMV99107WN	1.4	2.2	0.91	1.22	22800	20200	15200	38700	38700	25800
2MMV99108WN	1.7	2.7	1.14	1.52	19800	17600	13200	33700	33700	22400
2MMV99109WN	2.2	3.5	1.47	1.96	18200	16200	12100	30900	30900	20600
2MMV99110WN	2.4	3.8	1.58	2.11	16700	14800	11100	28300	28300	18900
2MMV99111WN	3.4	5.4	2.2	3	14900	13300	10000	25400	25400	17000
2MMV99112WN	3.6	5.8	2.4	3.2	13900	12300	9200	23600	23600	15600
2MMV99113WN	3.8	6.1	2.6	3.4	13000	11500	8600	22000	22000	14600
2MMV99114WN	5.1	8.2	3.4	4.6	11900	10600	7900	20200	20200	13400
2MMV99115WN	5.5	8.8	3.7	4.9	11100	9800	7400	18800	18800	12600
2MMV99116WN	7.1	11.3	4.7	6.3	10400	9300	7000	17700	17700	11900
2MMV99117WN	7.4	11.8	4.9	6.6	9900	8800	6600	16800	16800	11200
2MMV99118WN	9.7	15.6	6.5	8.7	9400	8300	6200	15900	15900	10500
2MMV99119WN	13.3	21.3	7.1	9.5	8900	7900	5900	15100	15100	10000
2MMV99120WN	10.6	17	7.4	9.9	8500	7500	5600	14400	14400	9500
2MMV99121WN	17.1	27.4	9.1	12.2	8000	7100	5300	13600	13600	9000
2MMV99122WN	16	25.6	10.7	14.2	7700	6800	5100	13000	13000	8700
2MMV99124WN	17.1	27.4	11.4	15.3	7100	6300	4700	12100	12100	8000
2MMV99126WN	25.8	41.3	17.2	23	6400	5700	4300	10900	10900	7300
2MMV99128WN	27.5	43.9	18.3	24.4	5900	5300	4000	10100	10100	6800
2MMV99130WN	43.9	70.3	29.3	39.1	5600	5000	3700	9500	9500	6300

[1] For other mounting arrangement configurations refer to the engineering section on Permissible Speed calculation methods.
[2] For ceramic ball complements use 120% of speeds shown.

EXTRA-LIGHT 3MMV99100WN (ISO 10) SERIES

SPEED CAPABILITY DATA

Bearing Number	Grease Capacity NBU15		Kluber Isoflex NBU15		Operating Speeds[2] (DB Mounting) [1]					
	25%	40%	15%	20%	Grease			Oil		
					DUL	DUM	DUH	DUL	DUM	DUH
	grams	grams	grams	grams	RPM	RPM	RPM	RPM	RPM	RPM
3MMV99101WN	0.3	0.5	0.2	0.3	58000	47700	34100	86900	71600	51100
3MMV99102WN	0.4	0.6	0.2	0.3	49000	40500	28900	73800	60800	43400
3MMV99103WN	0.5	0.7	0.3	0.4	43500	35800	25600	65300	53800	38400
3MMV99104WN	0.9	1.4	0.6	0.8	33500	27600	19700	50200	41400	29500
3MMV99105WN	1.0	1.6	0.7	0.9	27900	23000	16400	41800	34400	24600
3MMV99106WN	1.3	2.1	0.9	1.2	22500	18500	13200	33800	27800	19900
3MMV99107WN	1.4	2.2	0.9	1.2	19300	15900	11300	28900	23800	17000
3MMV99108WN	1.7	2.7	1.1	1.5	16800	13900	9900	25200	20800	14800
3MMV99109WN	2.2	3.5	1.5	2.0	15500	12700	9100	23200	19100	13600
3MMV99110WN	2.4	3.8	1.6	2.1	14200	11700	8300	21300	17500	12500
3MMV99111WN	3.4	5.4	2.2	3.0	12700	10400	7400	19000	15600	11200
3MMV99112WN	3.6	5.8	2.4	3.2	11800	9700	6900	17700	14600	10400
3MMV99113WN	3.8	6.1	2.6	3.4	11000	9100	6500	16600	13600	9700
3MMV99114WN	5.1	8.2	3.4	4.6	10100	8300	5900	15200	12500	8900
3MMV99115WN	5.5	8.8	3.7	4.9	9400	7800	5500	14100	11700	8300
3MMV99116WN	7.1	11.3	4.7	6.3	8800	7300	5200	13300	10900	7800
3MMV99117WN	7.4	11.8	4.9	6.6	8400	6900	4900	12600	10400	7400
3MMV99118WN	9.7	15.6	6.5	8.7	7900	6500	4700	11900	9800	7000
3MMV99119WN	13.3	21.3	7.1	9.5	7600	6200	4500	11400	9400	6700
3MMV99120WN	10.6	17.0	7.4	9.9	7200	5900	4200	10800	8900	6300
3MMV99121WN	17.1	27.4	9.1	12.2	6800	5600	4000	10300	8500	6000
3MMV99122WN	16.0	25.6	10.7	14.2	6500	5300	3800	9700	8000	5700
3MMV99124WN	17.1	27.4	11.4	15.3	6000	4900	3500	9000	7400	5300
3MMV99126WN	25.8	41.3	17.2	23.0	5400	4500	3200	8100	6700	4800
3MMV99128WN	27.5	43.9	18.3	24.4	5100	4200	3000	7600	6300	4500
3MMV99130WN	43.9	70.3	29.3	39.1	4800	3900	2800	7200	5900	4200

[1] For other mounting arrangement configurations refer to the engineering section on Permissible Speed calculation methods.
[2] For ceramic ball complements use 120% of speeds shown.

ULTRA-LIGHT MM9100K (ISO 10) SERIES

DIMENSIONAL SIZES METRIC

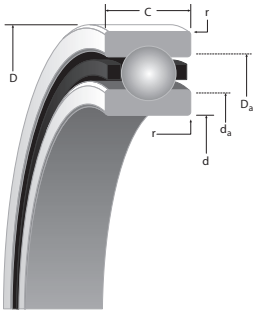

SUPER PRECISION MM:

Running accuracy and performance meet ABEC 9 (ISO P2) levels. Non-critical features conform to ABEC 7 (ISO P4) requirements.

CONRAD CONSTRUCTION:

- Maximum complement of balls separated by two-piece land piloted cage

Bearing Number	d Bore	D O.D.	C Width(1)	Ball Qty. x Dia.	Wt.	LOAD RATINGS (steel ball & ceramic ball) C_o (stat)	C_e(dyn)	Limiting Speed (Ng)
METRIC	mm/tol: +0; (µm)			mm	kg	N		RPM
MM9101K	12 (4)	28 (5)	8 (80)	8 x 4.76	0.020	2400 2130	5670 5670	52800 63400
MM9103K	17 (4)	35 (6)	10 (80)	10 x 4.76	0.038	3300 2890	6660 6660	39600 47500
MM9104K	20 (5)	42 (6)	12 (120)	8 x 6.35	0.064	4400 3980	9620 9620	34000 40800
MM9105K	25 (5)	47 (6)	12 (120)	10 x 6.35	0.074	5900 5210	11200 11200	28300 34000
MM9106K	30 (5)	55 (7)	13 (120)	11 x 7.14	0.109	8300 7390	14700 14700	23300 28000
MM9107K	35 (6)	62 (7)	14 (120)	11 x 7.94	0.144	10300 9150	17700 17700	20700 24800
MM9108K	40 (6)	68 (7)	15 (120)	12 x 7.94	0.180	11600 10300	18600 18600	18200 21800
MM9109K	45 (6)	75 (7)	16 (120)	13 x 8.73	0.230	15100 13500	23300 23300	16300 19600
MM9110K	50 (6)	80 (7)	16 (120)	14 x 8.73	0.248	16700 14700	24200 24200	14900 17900
MM9111K	55 (7)	90 (8)	18 (150)	13 x 10.32	0.362	21400 18900	31400 31400	13500 16200
MM9112K	60 (7)	95 (8)	18 (150)	14 x 10.32	0.430	23200 20600	32600 32600	12500 15000
MM9113K	65 (7)	100 (8)	18 (150)	15 x 10.32	0.450	25200 22400	33900 33900	11600 13900
MM9114K	70 (7)	110 (8)	20 (150)	14 x 11.91	0.620	30900 27500	42200 42200	10700 12800
MM9115K	75 (7)	115 (8)	20 (150)	15 x 11.91	0.606	33400 29800	43800 43800	10100 12100
MM9116K	80 (7)	125 (9)	22 (150)	14 x 13.49	0.804	40000 35300	52800 52800	9420 11300
MM9117K	85 (8)	130 (9)	22 (200)	15 x 13.49	0.845	42900 38300	54900 54900	8900 10700
MM9118K	90 (9)	140 (9)	24 (200)	14 x 15.08	1.092	49800 44100	64500 64500	8390 10100
MM9120K	100 (8)	150 (9)	24 (200)	15 x 15.08	1.208	54300 48200	66700 66700	7630 9160
MM9122K	110 (8)	170 (10)	28 (200)	14 x 17.46	1.882	66700 59900	83400 83400	6840 8240
MM9124K	120 (8)	180 (10)	28 (200)	15 x 17.46	2.019	72500 65000	86300 86300	6320 7500
MM9126K	130 (10)	200 (11)	33 (250)	14 x 20.64	3.041	94300 83600	112600 112600	5810 6975

(Ng) For a single, grease lubricated, spring preloaded bearing. This value to be used in permissible Operating Speed (Sp) calculation.
(1) Width tolerance of preloaded bearing set +0/-0.25 mm (+0/-0.010").
(2) ABMA STD 20 (r_{as} max).

r Rad.(2)	Suggested Shoulder Diameters d_a (Shaft) Max.	d_a (Shaft) Min.	D_a (Housing) Max.	D_a (Housing) Min.	Shaft Diameter Min.	Shaft Diameter Max.	Mounting Fits Loose	Mounting Fits Tight	FIXED Housing Bore (Stationary) Min.	FIXED Housing Bore (Stationary) Max.	FIXED Mounting Fits Tight	FIXED Mounting Fits Loose	FLOATING Housing Bore (Stationary) Max.	FLOATING Housing Bore (Stationary) Min.	FLOATING Housing Clearance Max.	FLOATING Housing Clearance Min.	
mm	mm	mm	mm	mm	mm	mm	mm	mm	mm	mm	mm	mm	mm	mm	mm	mm	
0.3	16.1	15.9	25.5	25.3	11.995	12.000	0.005	0.004	28	28.005	0.000	0.010	28.010	28.005	0.015	0.005	MM9101K
0.3	21.7	21.5	31.1	30.9	16.995	17.000	0.005	0.004	35	35.006	0.000	0.012	35.010	35.005	0.016	0.005	MM9103K
0.6	25.0	24.8	37.7	37.5	19.995	20.000	0.005	0.005	42	42.006	0.000	0.012	42.010	42.005	0.016	0.005	MM9104K
0.6	30.1	29.9	42.6	42.3	24.995	25.000	0.005	0.005	47	47.006	0.000	0.012	47.012	47.007	0.018	0.007	MM9105K
1.0	36.2	35.9	50.7	50.4	29.995	30.000	0.005	0.005	55	55.008	0.000	0.015	55.012	55.007	0.019	0.007	MM9106K
1.0	41.2	40.6	56.6	56.1	34.995	35.000	0.005	0.006	62	62.008	0.000	0.015	62.012	62.007	0.019	0.007	MM9107K
1.0	46.2	45.7	62.2	61.7	39.995	40.000	0.005	0.006	68	68.008	0.000	0.015	68.012	68.007	0.019	0.007	MM9108K
1.0	51.8	51.3	69.3	68.8	44.995	45.000	0.005	0.006	75	75.008	0.000	0.015	75.014	75.009	0.022	0.009	MM9109K
1.0	56.6	56.1	74.2	73.7	49.995	50.000	0.005	0.006	80	80.008	0.000	0.015	80.012	80.008	0.020	0.008	MM9110K
1.0	62.7	62.2	83.3	82.8	54.995	55.000	0.005	0.007	90	90.008	0.000	0.016	90.015	90.007	0.023	0.007	MM9111K
1.0	67.8	67.3	88.1	87.6	59.995	60.000	0.005	0.007	95	95.008	0.000	0.016	95.016	95.009	0.024	0.009	MM9112K
1.0	72.6	72.1	93.2	92.7	64.995	65.000	0.005	0.007	100	100.008	0.000	0.016	100.018	100.010	0.025	0.010	MM9113K
1.0	78.2	77.7	102.4	101.9	69.995	70.000	0.005	0.007	110	110.008	0.000	0.016	110.018	110.010	0.025	0.010	MM9114K
1.0	83.4	82.7	107.3	106.6	74.995	75.005	0.005	0.012	115	115.008	0.000	0.016	115.019	115.011	0.026	0.010	MM9115K
1.0	89.3	88.5	116.5	115.7	79.995	80.005	0.005	0.012	125	125.008	0.000	0.017	125.021	125.011	0.030	0.011	MM9116K
1.0	94.9	94.1	122.1	121.3	84.995	85.005	0.005	0.012	130	130.009	0.000	0.018	130.020	130.010	0.029	0.010	MM9117K
1.5	100.5	99.7	130.9	130.2	89.995	90.005	0.005	0.013	140	140.009	0.000	0.018	140.020	140.010	0.029	0.010	MM9118K
1.5	110.6	109.9	140.8	140.1	99.995	100.005	0.005	0.013	150	150.009	0.000	0.018	150.023	150.012	0.032	0.012	MM9120K
2.0	123.1	122.3	158.4	157.6	109.995	110.005	0.005	0.013	170	170.010	0.000	0.020	170.022	170.012	0.032	0.012	MM9122K
2.0	133.2	132.5	168.3	167.5	119.995	120.005	0.005	0.013	180	180.010	0.000	0.020	180.022	180.012	0.032	0.012	MM9124K
2.0	144.9	144.2	186.6	185.8	129.995	130.005	0.005	0.015	200	200.011	0.000	0.022	200.025	200.015	0.036	0.015	MM9126K

EXTRA-LIGHT MM9100K (ISO 10) SERIES

DIMENSIONAL SIZES INCHES

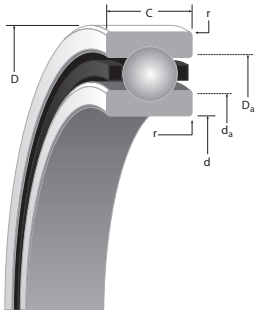

SUPER PRECISION MM:

Running accuracy and performance meet ABEC 9 (ISO P2) levels. Non-critical features conform to ABEC 7 (ISO P4) requirements.

CONRAD CONSTRUCTION:

- Maximum complement of balls separated by two-piece land piloted cage.

Bearing Number	d Bore	D O.D.	C Width(1)	Ball Qty. x Dia.	Wt.	LOAD RATINGS (steel ball & ceramic ball) C_o (stat)	C_e (dyn)	Limiting Speed
INCH	in./tol: +0; -.000(X)			in.	lbs.	lbs.		RPM
MM9101K	0.4724 (1.5)	1.1024 (2)	0.3150 (31)	8 x 3/16	0.04	540 480	1280 1280	52800 63400
MM9103K	0.6693 (1.5)	1.3780 (2.5)	0.3937 (31)	10 x 3/16	0.08	735 650	1500 1500	39600 47500
MM9104K	0.7874 (2)	1.6535 (2.5)	0.4724 (47)	8 x 1/4	0.14	1000 890	2160 2160	34000 40800
MM9105K	0.9843 (2)	1.8504 (2.5)	0.4724 (47)	10 x 1/4	0.16	1320 1170	2510 2510	28300 34000
MM9106K	1.1811 (2)	2.1654 (3)	0.5118 (47)	11 x 9/32	0.24	1860 1660	3300 3300	23300 28000
MM9107K	1.3780 (2.5)	2.4409 (3)	0.5512 (47)	11 x 5/16	0.32	2320 2060	3980 3980	20700 24800
MM9108K	1.5748 (2.5)	2.6772 (3)	0.5906 (47)	12 x 5/16	0.40	2600 2310	4180 4180	18300 21800
MM9109K	1.7717 (2.5)	2.9528 (3)	0.6299 (47)	13 x 11/32	0.51	3400 3030	5230 5230	16300 19600
MM9110K	1.9685 (2.5)	3.1496 (3)	0.6299 (47)	14 x 11/32	0.55	3750 3310	5440 5440	14900 17900
MM9111K	2.1654 (3)	3.5433 (3)	0.7087 (59)	13 x 13/32	0.80	4800 4250	7050 7050	13500 16200
MM9112K	2.3622 (3)	3.7402 (3)	0.7087 (59)	14 x 13/32	0.95	5210 4630	7340 7340	12500 15000
MM9113K	2.5591 (3)	3.9370 (3)	0.7087 (59)	15 x 13/32	0.99	5650 5030	7610 7610	11600 13900
MM9114K	2.7559 (3)	4.3307 (3)	0.7874 (59)	14 x 15/32	1.37	6940 6180	9490 9490	10700 12800
MM9115K	2.9528 (3)	4.5276 (3)	0.7874 (59)	15 x 15/32	1.34	7500 6700	9850 9850	10100 12100
MM9116K	3.1496 (3)	4.9213 (3.5)	0.8661 (59)	14 x 17/32	1.77	9000 7940	11900 11900	9420 11300
MM9117K	3.3465 (3)	5.1181 (3.5)	0.8661 (79)	15 x 17/32	1.86	9650 8600	12300 12300	8900 10700
MM9118K	3.5433 (3)	5.5118 (3.5)	0.9449 (79)	14 x 19/32	2.41	11200 9920	14500 14500	8390 10100
MM9120K	3.9370 (3)	5.9055 (3.5)	0.9449 (79)	15 x 19/32	2.66	12200 10800	15000 15000	7630 9160
MM9122K	4.3307 (3)	6.6929 (4)	1.1024 (79)	14 x 11/16	4.15	15000 13500	18700 18700	6840 8,210
MM9124K	4.7244 (3)	7.0866 (4)	1.1024 (79)	15 x 11/16	4.45	16300 14600	19400 19400	6320 7580
MM9126K	5.1181 (4)	7.8740 (4.5)	1.2992 (98)	14 x 13/16	6.70	21200 18800	25300 25300	5810 6975

(Ng) For a single, grease lubricated, spring preloaded bearing. This value to be used in permissible Operating Speed (Sp) calculation.
(1) Width tolerance of preloaded bearing set +0/-0.25 mm (+0/-0.010").
(2) ABMA STD 20 (r_{as} max).

r	Suggested Shoulder Diameters				Shaft Diameter		Mounting Fits		FIXED				FLOATING				
	d_a (Shaft)		D_a (Housing)						Housing Bore (Stationary)		Mounting Fits		Housing Bore (Stationary)		Housing Clearance		
Rad.[2]	Max.	Min.	Max.	Min.	Min.	Max.	Loose	Tight	Min.	Max.	Tight	Loose	Max.	Min.	Max.	Min.	
in.	in.	in.	in.	in.	in.	in.	in.	in.	in.	in.	in.	in.	in.	in.	in.	in.	
0.012	0.64	0.63	1.01	1.00	0.4722	0.4724	0.0002	0.00015	1.1024	1.1026	0.0000	0.0004	1.1028	1.1026	0.00060	0.00020	MM9101K
0.012	0.86	0.85	1.23	1.22	0.6691	0.6693	0.0002	0.00015	1.3780	1.3783	0.0000	0.0005	1.3784	1.3782	0.00070	0.00020	MM9103K
0.024	0.99	0.98	1.49	1.48	0.7872	0.7874	0.0002	0.0002	1.6535	1.6538	0.0000	0.0005	1.6539	1.6537	0.00070	0.00020	MM9104K
0.024	1.19	1.18	1.68	1.67	0.9841	0.9843	0.0002	0.0002	1.8504	1.8507	0.0000	0.0005	1.8509	1.8507	0.00080	0.00030	MM9105K
0.039	1.43	1.42	2.00	1.99	1.1809	1.1811	0.0002	0.0002	2.1654	2.1657	0.0000	0.0006	2.1659	2.1657	0.00080	0.00030	MM9106K
0.039	1.62	1.60	2.23	2.21	1.3778	1.3780	0.0002	0.00025	2.4409	2.4412	0.0000	0.0006	2.4414	2.4412	0.00080	0.00030	MM9107K
0.039	1.82	1.80	2.45	2.43	1.5746	1.5748	0.0002	0.00025	2.6772	2.6775	0.0000	0.0006	2.6777	2.6775	0.00080	0.00030	MM9108K
0.039	2.04	2.02	2.73	2.71	1.7715	1.7717	0.0002	0.00025	2.9528	2.9531	0.0000	0.0006	2.9533	2.9531	0.00080	0.00030	MM9109K
0.039	2.23	2.21	2.92	2.90	1.9683	1.9685	0.0002	0.00025	3.1496	3.1499	0.0000	0.0006	3.1501	3.1499	0.00080	0.00030	MM9110K
0.039	2.47	2.45	3.28	3.26	2.1652	2.1654	0.0002	0.0003	3.5433	3.5436	0.0000	0.0006	3.5439	3.5436	0.00090	0.00030	MM9111K
0.039	2.67	2.65	3.47	3.45	2.3620	2.3622	0.0002	0.0003	3.7402	3.7405	0.0000	0.0006	3.7408	3.7405	0.00090	0.00030	MM9112K
0.039	2.86	2.84	3.67	3.65	2.5589	2.5591	0.0002	0.0003	3.9370	3.9373	0.0000	0.0006	3.9377	3.9374	0.00100	0.00040	MM9113K
0.039	3.08	3.06	4.03	4.01	2.7557	2.7559	0.0002	0.0003	4.3307	4.3310	0.0000	0.0006	4.3314	4.3311	0.00100	0.00040	MM9114K
0.039	3.29	3.26	4.23	4.20	2.9526	2.9530	0.0002	0.0005	4.5276	4.5279	0.0000	0.0006	4.5283	4.5280	0.00100	0.00040	MM9115K
0.039	3.52	3.49	4.59	4.56	3.1494	3.1498	0.0002	0.0005	4.9213	4.9216	0.0000	0.0007	4.9221	4.9217	0.00120	0.00040	MM9116K
0.039	3.74	3.71	4.81	4.78	3.3463	3.3467	0.0002	0.0005	5.1181	5.1185	0.0000	0.0007	5.1189	5.1185	0.00110	0.00040	MM9117K
0.059	3.96	3.93	5.16	5.13	3.5431	3.5435	0.0002	0.0005	5.5118	5.5122	0.0000	0.0007	5.5126	5.5122	0.00110	0.00040	MM9118K
0.059	4.36	4.33	5.55	5.52	3.9368	3.9372	0.0002	0.0005	5.9055	5.9059	0.0000	0.0007	5.9064	5.9060	0.00120	0.00050	MM9120K
0.079	4.85	4.82	6.24	6.21	4.3305	4.3309	0.0002	0.0005	6.6929	6.6933	0.0000	0.0008	6.6938	6.6934	0.00130	0.00050	MM9122K
0.079	5.25	5.22	6.63	6.60	4.7242	4.7246	0.0002	0.0005	7.0866	7.0870	0.0000	0.0008	7.0875	7.0871	0.00130	0.00050	MM9124K
0.079	5.71	5.68	7.35	7.32	5.1179	5.1183	0.0002	0.0006	7.8740	7.8745	0.0000	0.0009	7.8750	7.8746	0.00150	0.00060	MM9126K

LIGHT 2(3)MM200WI (ISO 02) SERIES

DIMENSIONAL SERIES METRIC

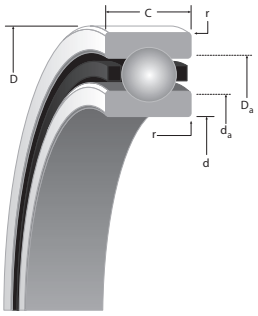

SUPER PRECISION MM:

Running accuracy and performance meet ABEC 9 (ISO P2) levels. Non-critical features conform to ABEC 7 (ISO P4) requirements.

WI CONSTRUCTION:

- Incorporates low shoulder on non-thrust side of outer rings.
- Maximum complement of balls separated by one-piece cage piloted against a ground thrust shoulder land of the outer ring.

Bearing Number						(2MM) LOAD RATINGS (steel ball & ceramic ball)			(3MM) LOAD RATINGS (steel ball & ceramic ball)		
2MM or 3MM	d Bore	D O.D.	C Width(1)	Ball Qty . x Dia.	Wt.	C_o (stat)	C_e (dyn)	Limiting Speed(Ng)	C_o (stat)	C_e (dyn)	Limiting Speed(Ng)
METRIC	mm/tol: +0; -(µm)			mm	kg	N		RPM	N		RPM
200WI	10 (3.8)	30 (5.1)	9 (40)	8 x 5.56	0.03	2900 2610	7100 7100	62800 75400	2800 2540	6900 6900	56500 67800
201WI	12 (3.8)	32 (6.4)	10 (80)	9 x 5.95	0.036	3800 3410	8760 8760	56700 68000	3700 3320	8500 8500	51000 61200
202WI	15 (3.8)	35 (6.4)	11 (80)	10 x 5.95	0.044	4500 4010	9580 9580	47800 57400	4400 3880	9250 9250	43000 51600
203WI	17 (3.8)	40 (6.4)	12 (80)	10 x 6.75	0.064	5900 5170	12000 12000	41900 50300	5600 5000	11600 11600	37700 45200
204WI	20 (5.1)	47 (6.4)	14 (130)	10 x 7.94	0.103	8100 7160	16100 16100	35700 42800	7700 6900	15500 15500	32100 38500
205WI	25 (5.1)	52 (7.7)	15 (130)	12 x 7.94	0.127	10200 9110	18400 18400	29800 35800	9800 8690	17600 17600	26800 32200
206WI	30 (5.1)	62 (7.7)	16 (130)	12 x 9.53	0.195	14700 13100	25500 25500	25100 30100	14000 12500	24400 24400	22600 27100
207WI	35 (6.4)	72 (7.7)	17 (130)	12 x 11.11	0.282	20000 17800	33700 33700	21600 25900	19100 17100	32200 32200	19400 23300
208WI	40 (6.4)	80 (7.7)	18 (130)	11 x 12.70	0.352	23800 21100	40,400 40400	19300 23100	22700 20200	38700 38700	17400 20900
209WI	45 (6.4)	85 (7.7)	19 (130)	13 x 12.70	0.408	28800 25600	45200 45200	17500 21000	27600 24500	43100 43100	15800 19000
210WI	50 (6.4)	90 (7.7)	20 (130)	14 x 12.70	0.457	31700 28200	47400 47400	16000 19200	30200 26900	45200 45200	14400 17300
211WI	55 (7.7)	100 (7.7)	21 (150)	14 x 14.29	0.608	40000 35500	58700 58700	14500 17400	38500 34000	55900 55900	13100 15700
212WI	60 (7.7)	110 (7.7)	22 (150)	14 x 15.88	0.787	48900 43600	71000 71000	13200 15800	47100 41800	67700 67700	11900 14300
213WI	65 (7.7)	120 (7.7)	23 (150)	14 x 16.67	0.998	54700 48700	77400 77400	12100 14300	52500 46500	73700 73700	10900 13100
214WI	70 (7.7)	125 (9)	24 (150)	14 x 17.46	1.074	60000 53600	84200 84200	11400 13700	57400 51100	80200 80200	10300 12400
215WI	75 (7.7)	130 (9)	25 (150)	15 x 17.46	1.174	64900 58200	87900 87900	10800 13000	62300 55600	83700 83700	9700 11600
216WI	80 (7.7)	140 (9)	26 (150)	15 x 19.05	1.448	77000 69000	102900 102900	10100 12100	73800 65800	98000 98000	9100 10900
217WI	85 (7.7)	150 (9)	28 (200)	15 x 20.64	1.817	90700 80,700	118900 118900	9400 11300	85800 76800	113300 113300	8500 10200
218WI	90 (7.7)	160 (10.3)	30 (200)	14 x 22.23	2.196	97900 87100	129900 129900	8900 10700	92500 82900	123700 123700	8000 9600
219WI	95 (7.7)	170 (10.3)	32 (200)	14 x 23.81	2.669	111200 9600	147100 147100	8400 10100	106800 94900	140100 140100	7600 9100
220WI	100 (7.7)	180 (10.3)	34 (200)	14 x 25.40	3.209	126800 112900	165200 165200	8000 9600	120100 107800	15500 157500	7200 8600
222WI	110 (7.7)	200 (11.5)	38 (200)	14 x 28.58	4.486	160100 142000	194900 194900	7200 8600	153500 135900	185800 185800	6500 7800
224WI	120 (7.7)	215 (11.5)	40 (200)	14 x 30.16	5.358	180100 159600	210100 210100	6700 8000	173500 152400	200500 200500	6000 7200
226WI	130 (10.3)	230 (11.5)	40 (250)	17 x 30.16	6.468	222400 197400	238200 238200	6100 7300	211300 188800	226800 226800	5500 6600
230WI	150 (10.3)	270 (12.8)	45 (250)	15 x 38.10	9.98	302500 272100	305200 305200	5300 6400	291300 259900	290900 290900	4800 5800

(Ng) For a single, grease lubricated, spring preloaded bearing. This value to be used in permissible Operating Speed (Sp) calculation.
(1) Width tolerance of preloaded bearing set +0/-0.25 mm (+0/-0.010").
(2) ABMA STD 20 (r_{as} max).

r Rad.(2)	Suggested Shoulder Diameters d_a (Shaft) Max.	d_a (Shaft) Min.	D_a (Housing) Max.	D_a (Housing) Min.	Shaft Diameter Min.	Shaft Diameter Max.	Mounting Fits Loose	Mounting Fits Tight	FIXED Housing Bore (Stationary) Min.	FIXED Housing Bore (Stationary) Max.	FIXED Mounting Fits Tight	FIXED Mounting Fits Loose	FLOATING Housing Bore (Stationary) Max.	FLOATING Housing Bore (Stationary) Min.	FLOATING Housing Clearance Max.	FLOATING Housing Clearance Min.	Bearing Number 2MM or 3MM
mm	mm	mm	mm	mm	mm	mm	mm	mm	mm	mm	mm	mm	mm	mm	mm	mm	
0.6	15.1	14.9	26	25.8	9.995	10.000	0.005	0.004	30	30.005	0.000	0.010	30.010	30.005	0.015	0.005	200WI
0.6	16.6	16.4	28.1	27.8	11.995	12.000	0.005	0.004	32	32.005	0.000	0.011	32.010	32.005	0.016	0.005	201WI
0.6	19.2	18.9	31.1	30.9	14.995	15.000	0.005	0.004	35	35.006	0.000	0.012	35.010	35.005	0.016	0.005	202WI
0.6	21.7	21.5	35.7	35.4	16.995	17.000	0.005	0.004	40	40.006	0.000	0.012	40.010	40.005	0.016	0.005	203WI
1	26	25.8	41.5	41.3	19.995	20.000	0.005	0.005	47	47.006	0.000	0.012	47.012	47.007	0.018	0.007	204WI
1	31.1	30.9	47.1	46.9	24.995	25.000	0.005	0.005	52	52.006	0.000	0.013	52.012	52.007	0.019	0.007	205WI
1	36.7	36.5	56	55.8	29.995	30..000	0.005	0.005	62	62.008	0.000	0.015	62.012	62.007	0.019	0.007	206WI
1	42.7	42.2	65.3	64.8	34.995	35.000	0.005	0.006	72	72.008	0.000	0.015	72.011	72.007	0.019	0.007	207WI
1	47.8	47.2	73.2	72.6	39.995	40.000	0.005	0.006	80	80.008	0.000	0.015	80.012	80.008	0.02	0.008	208WI
1	52.8	52.3	78.2	77.7	44.995	45.000	0.005	0.006	85	85.008	0.000	0.016	85.016	85.009	0.024	0.009	209WI
1	57.9	57.4	83.3	82.8	49.995	50.000	0.005	0.006	90	90.008	0.000	0.016	90.015	90.007	0.023	0.007	210WI
1.5	63.8	63.3	92.2	91.7	54.995	55.000	0.005	0.007	100	100.008	0.000	0.016	100.018	100.010	0.025	0.01	211WI
1.5	69.9	69.3	101.4	100.8	59.995	60.000	0.005	0.007	110	110.008	0.000	0.016	110.018	110.010	0.025	0.010	212WI
1.5	76.2	75.7	109.7	109.2	64.995	65.000	0.005	0.007	120	120.008	0.000	0.016	120.018	120.010	0.025	0.010	213WI
1.5	80.8	80.3	115.8	115.3	69.995	70.000	0.005	0.007	125	125.008	0.000	0.017	125.021	125.011	0.03	0.011	214WI
1.5	86	85.2	120.8	120	74.995	75.005	0.005	0.012	130	130.009	0.000	0.018	130.020	130.010	0.029	0.010	215WI
2	91.3	90.6	129.9	129.2	79.995	80.005	0.005	0.012	140	140.009	0.000	0.018	140.020	140.010	0.029	0.010	216WI
2	97.4	96.7	138.8	138.1	84.995	85.005	0.005	0.012	150	150.009	0.000	0.018	150.023	150.012	0.032	0.012	217WI
2	103.5	102.7	148	147.2	89.995	90.005	0.005	0.013	160	160.009	0.000	0.022	160.022	160.012	0.033	0.012	218WI
2.1	109.4	108.6	157.1	153.3	94.995	95.005	0.005	0.013	170	170.010	0.000	0.02	170.022	170.012	0.032	0.012	219WI
2.1	115.2	114.4	166	165.2	99.995	100.005	0.005	0.013	180	180.010	0.000	0.02	180.022	180.012	0.032	0.012	220WI
2.1	127.1	126.4	184.3	183.5	109.995	110.005	0.005	0.013	200	200.011	0.000	0.022	200.025	200.015	0.036	0.015	222WI
2.1	138.1	137.3	198.5	197.7	119.995	120.005	0.005	0.013	215	215.011	0.000	0.022	215.025	215.015	0.036	0.015	224WI
2.5	150.5	149.7	211	210.2	129.995	130.005	0.005	0.015	230	230.011	0.000	0.022	230.025	230.015	0.036	0.015	226WI
2.5	172.6	171.8	248.8	248	149.995	150.005	0.005	0.015	270	270.013	0.000	0.026	270.031	270.018	0.044	0.018	230WI

LIGHT
2(3)MM200WI
(ISO 02) SERIES

DIMENSIONAL SERIES
INCHES

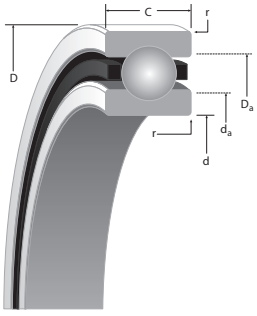

SUPER PRECISION MM:

Running accuracy and performance meet ABEC 9 (ISO P2) levels. Non-critical features conform to ABEC 7 (ISO P4) requirements.

WI CONSTRUCTION:

- Incorporates low shoulder on non-thrust side of outer rings.
- Maximum complement of balls separated by one-piece cage piloted against a ground thrust shoulder land of the outer ring.

Bearing Number						(2MM) LOAD RATINGS (steel ball & ceramic ball)			(3MM) LOAD RATINGS (steel ball & ceramic ball)		
2MM or 3MM	d Bore	D O.D.	C Width(1)	Ball Qty. x Dia.	Wt.	C_o (stat)	C_e (dyn)	Limiting Speed (Ng)	C_o (stat)	C_e (dyn)	Limiting Speed (Ng)
INCHES	in./tol: +0; -.000(X)			in.	lbs.	lbs.		RPM	lbs.		RPM
200WI	0.3937 (1.5)	1.1811 (2)	0.3543 (16)	8 x 7/32	0.07	660 590	1600 1600	62800 75400	640 570	1550 1550	56500 67800
201WI	0.4724 (1.5)	1.2598 (2.5)	0.3937 (31)	9 x 15/64	0.08	860 770	1970 1970	56700 68000	830 750	1910 1910	51000 61200
202WI	0.5906 (1.5)	1.378 (2.5)	0.4331 (31)	10 x 15/64	0.1	1010 900	2200 2200	47800 57400	980 870	2080 2080	43000 51600
203WI	0.6693 (1.5)	1.5748 (2.5)	0.4724 (31)	10 x 17/64	0.14	1320 1160	2750 2750	41900 50300	1270 1120	2600 2600	37700 45200
204WI	0.7874 (2)	1.8504 (2.5)	0.5512 (47)	10 x 5/16	0.23	1810 1610	3620 3620	35700 42800	1730 1550	3490 3490	32100 38500
205WI	0.9843 (2)	2.0472 (3)	0.5906 (47)	12 x 5/16	0.28	2320 2050	4130 4130	29800 35800	2200 1950	3950 3950	26800 32100
206WI	1.1811 (2)	2.4409 (3)	0.6299 (47)	12 x 3/8	0.43	3310 2940	5740 5740	25100 30100	3150 2810	5490 5490	22600 27100
207WI	1.378 (2.5)	2.8346 (3)	0.6693 (47)	12 x 7/16	0.62	4490 4000	7580 7580	21600 25900	4300 3820	7240 7240	19400 23300
208WI	1.5748 (2.5)	3.1496 (3)	0.7087 (47)	11 x 1/2	0.78	5340 4750	9070 9070	19300 23200	5100 4550	8690 8690	17400 20900
209WI	1.7717 (2.5)	3.3465 (3)	0.748 (47)	13 x 1/2	0.9	6470 5760	10200 10200	17500 21000	6200 5500	9700 9700	15800 19000
210WI	1.9685 (2.5)	3.5433 (3)	0.7874 (47)	14 x 1/2	1.01	7130 6340	10700 10700	16000 19200	6800 6050	10200 10200	14400 17300
211WI	2.1654 (3)	3.937 (3)	0.8268 (59)	14 x 9/16	1.34	9000 7980	13200 13200	14500 17400	8650 7640	12600 12600	13100 15700
212WI	2.3622 (3)	4.3307 (3)	0.8661 (59)	14 x 5/8	1.74	11000 9810	16000 16000	13200 15800	10600 9400	15200 15200	11900 14300
213WI	2.5591 (3)	4.7244 (3)	0.9055 (59)	14 x 21/32	2.2	12300 11000	17400 17400	12100 14500	11800 10400	16600 16600	10900 13100
214WI	2.7559 (3)	4.9213 (3.5)	0.9449 (59)	14 x 11/16	2.37	13400 12100	18900 18900	11400 13700	12900 11500	18000 18000	10300 12400
215WI	2.9528 (3)	5.1181 (3.5)	0.9843 (59)	15 x 11/16	2.59	14600 13100	19800 19800	10800 13000	14000 12500	18800 18800	9700 11600
216WI	3.1496 (3)	5.5118 (3.5)	1.0236 (59)	15 x 3/4	3.19	17300 15500	23100 23100	10100 12100	16600 14800	22000 22000	9100 10900
217WI	3.3465 (3)	5.9055 (3.5)	1.1024 (79)	15 x 13/16	4.01	20400 18200	26700 26700	9400 11300	19300 17300	25500 25500	8500 10200
218WI	3.5433 (3)	6.2992 (4)	1.1811 (79)	14 x 7/8	4.84	22000 19600	29200 29200	8900 10700	20800 18600	27800 27800	8000 9600
219WI	3.7402 (3)	6.6929 (4)	1.2598 (79)	14 x 15/16	5.88	25000 22400	33100 33100	8400 10100	24000 21300	31500 31500	7600 9100
220WI	3.937 (3)	7.0866 (4)	1.3386 (79)	14 x 1	7.07	28500 25400	37100 37100	8000 9600	27000 24200	35400 35400	7200 8600
222WI	4.3307 (3)	7.874 (4.5)	1.4961 (79)	14 x 1 1/8	9.89	36000 31900	43800 43800	7200 8600	34500 30600	41800 41800	6500 7800
224WI	4.7244 (3)	8.4646 (4.5)	1.5748 (79)	14 x 1 3/16	11.81	40500 35900	47200 47200	6700 8000	39000 34300	45100 45100	6000 7200
226WI	5.1181 (4)	9.0551 (4.5)	1.5748 (98)	17 x 1 3/16	14.26	50000 44400	53500 53500	6100 7300	47500 42500	51000 51000	5500 6600
230WI	5.9055 (4)	10.6299 (5)	1.7717 (98)	15 x 1 1/2	22	68000 61200	68600 68600	5300 6400	65500 58400	65400 65400	4800 5800

(Ng) For a single, grease lubricated, spring preloaded bearing. This value to be used in permissible Operating Speed (Sp) calculation.
(1) Width tolerance of preloaded bearing set +0/-0.25 mm (+0/-0.010").
(2) ABMA STD 20 (r_{as} max).

r Rad.(2)	Suggested Shoulder Diameters d_a (Shaft) Max.	d_a (Shaft) Min.	D_a (Housing) Max.	D_a (Housing) Min.	Shaft Diameter Min.	Shaft Diameter Max.	Mounting Fits Loose	Mounting Fits Tight	FIXED Housing Bore (Stationary) Min.	FIXED Housing Bore (Stationary) Max.	FIXED Mounting Fits Tight	FIXED Mounting Fits Loose	FLOATING Housing Bore (Stationary) Max.	FLOATING Housing Bore (Stationary) Min.	FLOATING Housing Clearance Max.	FLOATING Housing Clearance Min.	Bearing Number 2MM or 3MM
in.	in.	in.	in.	in.	in.	in.	in.	in.	in.	in.	in.	in.	in.	in.	in.	in.	
0.024	0.60	0.59	1.03	1.02	0.3935	0.3937	0.0002	0.00015	1.1811	1.1813	0.000	0.0004	1.18150	1.18130	0.00060	0.00020	200WI
0.024	0.66	0.65	1.11	1.10	0.4722	0.4724	0.0002	0.00015	1.2598	1.2600	0.000	0.00045	1.26020	1.26000	0.00070	0.00020	201WI
0.024	0.76	0.75	1.23	1.22	0.5904	0.5906	0.0002	0.00015	1.3780	1.3783	0.000	0.0005	1.37840	1.37820	0.00070	0.00020	202WI
0.024	0.86	0.85	1.41	1.40	0.6691	0.6693	0.0002	0.00015	1.5748	1.5751	0.000	0.0005	1.57520	1.57500	0.00070	0.00020	203WI
0.039	1.03	1.02	1.64	1.63	0.7872	0.7874	0.0002	0.0002	1.8504	1.8507	0.000	0.0005	1.85090	1.85070	0.00080	0.00030	204WI
0.039	1.23	1.22	1.86	1.85	0.9841	0.9843	0.0002	0.0002	2.0472	2.0475	0.000	0.00055	2.04770	2.04750	0.00080	0.00030	205WI
0.039	1.45	1.44	2.21	2.20	1.1809	1.1811	0.0002	0.0002	2.4409	2.4412	0.000	0.0006	2.44140	2.44120	0.00080	0.00030	206WI
0.039	1.68	1.66	2.57	2.55	1.3778	1.3780	0.0002	0.00025	2.8346	2.8349	0.000	0.0006	2.83510	2.83490	0.00080	0.00030	207WI
0.039	1.88	1.86	2.88	2.86	1.5746	1.5748	0.0002	0.00025	3.1496	3.1499	0.000	0.0006	3.15010	3.14990	0.00080	0.00030	208WI
0.039	2.08	2.06	3.08	3.06	1.7715	1.7717	0.0002	0.00025	3.3465	3.3468	0.000	0.0006	3.34710	3.34680	0.00090	0.00030	209WI
0.039	2.28	2.26	3.28	3.26	1.9683	1.9685	0.0002	0.00025	3.5433	3.5436	0.000	0.0006	3.54390	3.54360	0.00090	0.00030	210WI
0.059	2.51	2.49	3.63	3.61	2.1652	2.1654	0.0002	0.0003	3.9370	3.9373	0.000	0.0006	3.93770	3.93740	0.00100	0.00040	211WI
0.059	2.75	2.73	3.99	3.97	2.3620	2.3622	0.0002	0.0003	4.3307	4.3310	0.000	0.0006	4.33140	4.33110	0.00100	0.00040	212WI
0.059	3.00	2.98	4.32	4.30	2.5589	2.5591	0.0002	0.0003	4.7244	4.7247	0.000	0.0006	4.72510	4.72480	0.00100	0.00040	213WI
0.059	3.18	3.16	4.56	4.54	2.7557	2.7559	0.0002	0.0003	4.9213	4.9216	0.000	0.0007	4.92210	4.92170	0.00120	0.00040	214WI
0.059	3.39	3.36	4.76	4.73	2.9526	2.9530	0.0002	0.0005	5.1181	5.1185	0.000	0.0007	5.11890	5.11850	0.00110	0.00040	215WI
0.079	3.60	3.57	5.12	5.09	3.1494	3.1498	0.0002	0.0005	5.5118	5.5122	0.000	0.0007	5.51260	5.51220	0.00110	0.00040	216WI
0.079	3.84	3.81	5.47	5.44	3.3463	3.3467	0.0002	0.0005	5.9055	5.9059	0.000	0.0007	5.90640	5.9060	0.00120	0.00050	217WI
0.079	4.08	4.05	5.83	5.8	3.5431	3.5435	0.0002	0.0005	6.2992	6.2996	0.000	0.0008	6.30010	6.29970	0.00130	0.00050	218WI
0.079	4.31	4.28	6.19	6.16	3.7400	3.7404	0.0002	0.0005	6.6929	6.6933	0.000	0.0008	6.69380	6.69340	0.00130	0.00050	219WI
0.079	4.54	4.51	6.54	6.51	3.9368	3.9372	0.0002	0.0005	7.0866	7.0870	0.000	0.0008	7.08750	7.08710	0.00130	0.00050	220WI
0.079	5.01	4.98	7.26	7.23	4.3305	4.3309	0.0002	0.0005	7.8740	7.8745	0.000	0.0009	7.87500	7.87460	0.00150	0.00060	222WI
0.079	5.44	5.41	7.82	7.79	4.7242	4.7246	0.0002	0.0005	8.4646	8.4651	0.000	0.0009	8.46560	8.46520	0.00150	0.00060	224WI
0.098	5.93	5.9	8.31	8.28	5.1179	5.1183	0.0002	0.0006	9.0551	9.0556	0.000	0.0009	9.05610	9.05570	0.00150	0.00060	226WI
0.098	6.8	6.77	9.8	9.77	5.9053	5.9057	0.0002	0.0006	10.6299	10.6304	0.000	0.0010	10.63120	10.63070	0.00180	0.00080	230WI

LIGHT 2MM200WI (ISO 02) SERIES

DUPLEX PERFORMANCE DATA

MOUNTING ARRANGEMENTS

Suggested
DB

Tandem
DT

Special Applications
DF

Bearing Number	PRELOAD DUX	PRELOAD DUL	PRELOAD DUM	PRELOAD DUH	AXIAL STIFFNESS(1) X-light	AXIAL STIFFNESS(1) Light	AXIAL STIFFNESS(1) Medium	AXIAL STIFFNESS(1) Heavy	RADIAL STIFFNESS(1) Light	RADIAL STIFFNESS(1) Medium	RADIAL STIFFNESS(1) Heavy	SPACER OFFSETS(1) X-Light to Light	SPACER OFFSETS(1) Light to Medium	SPACER OFFSETS(1) Medium to Heavy
	N				N/µm				N/µm			µm		
METRIC DUPLEX PERFORMANCE DATA 2MM200WN SERIES														
2MM200WI	—	20	90	160	—	18.54	33.06	42.85	85.88	136.07	162.13	—	10.41	7.11
2MM201WI	—	20	90	160	—	19.24	34.11	44.07	96.02	153.56	183.30	—	9.91	6.86
2MM202WI	—	20	90	180	—	20.64	36.20	49.67	102.67	164.93	205.51	—	9.40	8.38
2MM203WI	—	40	130	330	—	25.54	41.10	63.84	137.12	197.46	263.05	—	10.67	15.24
2MM204WI	—	70	180	360	—	30.08	46.17	64.36	168.43	232.97	289.81	—	11.68	12.95
2MM205WI	—	90	220	400	—	37.60	56.49	74.86	209.53	283.16	340.88	—	11.43	10.92
2MM206WI	—	90	220	560	—	38.30	56.49	87.10	222.47	303.10	405.77	—	11.18	18.54
2MM207WI	—	130	400	780	—	47.22	75.91	104.42	269.35	388.10	478.70	—	17.27	16.76
2MM208WI	—	130	440	890	—	45.30	75.73	105.46	261.65	392.65	489.20	—	20.57	19.56
2MM209WI	110	180	560	1110	46.52	56.14	91.82	128.20	322.87	472.58	588.36	5.08	20.32	20.32
2MM210WI	130	220	560	1220	51.60	64.19	95.67	139.57	366.24	496.89	637.86	6.35	16.76	22.61
2MM211WI	160	220	780	1560	54.22	63.31	109.49	153.74	382.86	582.42	724.61	4.83	25.65	23.62
2MM212WI	180	330	890	1890	59.12	77.66	119.11	171.40	456.31	632.26	802.44	9.65	22.61	27.69
2MM213WI	200	440	1000	2110	62.61	88.32	126.28	181.20	511.76	668.64	846.52	13.46	20.83	28.96
2MM214WI	220	440	1110	2220	67.86	89.72	133.97	186.97	519.80	703.80	876.25	11.18	23.88	27.69
2MM215WI	240	560	1220	2450	72.93	102.49	145.34	203.06	586.96	760.64	946.38	14.48	21.59	28.19
2MM216WI	270	670	1450	2780	77.66	113.16	159.16	217.75	639.96	825.18	1014.59	17.02	22.86	28.45
2MM217WI	290	780	1670	3340	80.63	119.28	167.38	234.19	692.78	890.07	1108.17	19.05	24.89	33.27
2MM218WI	330	780	1780	3560	82.55	116.83	168.25	235.07	678.61	891.47	1109.92	18.03	27.94	35.31
2MM219WI	360	890	2000	4000	86.75	126.10	179.97	250.98	726.88	932.74	1183.02	20.07	28.96	37.08
2MM220WI	380	1110	2220	4450	88.85	137.65	187.14	261.30	795.8	1000.08	1245.99	25.91	27.43	39.62
2MM222WI	440	1330	2670	5340	98.64	153.91	208.48	289.81	881.32	1108.17	1381.36	28.19	29.46	42.93
2MM224WI	490	1470	2940	5870	102.84	158.81	215.65	300.13	926.97	1166.06	1453.59	29.46	31.24	45.47
2MM226WI	560	1650	3290	6580	121.21	186.44	252.38	350.32	1089.45	1372.44	1712.80	27.94	29.97	43.69
2MM230WI	690	1890	3780	7560	130.30	192.74	258.85	356.10	1136.85	1437.33	1797.97	29.46	33.53	49.28
	lbs.				10^6lbs./in.				10^6lbs./in.			in.		
INCH DUPLEX PERFORMANCE DATA 2MM200WI SERIES														
2MM200WI	—	5	20	35	—	0.106	0.189	0.245	0.491	0.778	0.927	—	0.00041	0.00028
2MM201WI	—	5	20	35	—	0.110	0.195	0.252	0.549	0.878	1.048	—	0.00039	0.00027
2MM202WI	—	5	20	40	—	0.118	0.207	0.284	0.587	0.943	1.175	—	0.00037	0.00033
2MM203WI	—	10	30	75	—	0.146	0.235	0.365	0.784	1.129	1.504	—	0.00042	0.0006
2MM204WI	—	15	40	80	—	0.172	0.264	0.368	0.963	1.332	1.657	—	0.00046	0.00051
2MM205WI	—	20	50	90	—	0.215	0.323	0.428	1.198	1.619	1.949	—	0.00045	0.00043
2MM206WI	—	20	50	125	—	0.219	0.323	0.498	1.272	1.733	2.320	—	0.00044	0.00073
2MM207WI	—	30	90	175	—	0.270	0.434	0.597	1.540	2.219	2.737	—	0.00068	0.00066
2MM208WI	—	30	100	200	—	0.259	0.433	0.603	1.496	2.245	2.797	—	0.00081	0.00077
2MM209WI	25	40	125	250	0.266	0.321	0.525	0.733	1.846	2.702	3.364	0.0002	0.0008	0.0008
2MM210WI	30	50	125	275	0.295	0.367	0.547	0.798	2.094	2.841	3.647	0.00025	0.00066	0.00089
2MM211WI	35	50	175	350	0.310	0.362	0.626	0.879	2.189	3.330	4.143	0.00019	0.00101	0.00093
2MM212WI	40	75	200	425	0.338	0.444	0.681	0.980	2.609	3.615	4.588	0.00038	0.00089	0.00109
2MM213WI	45	100	225	475	0.358	0.505	0.722	1.036	2.926	3.823	4.840	0.00053	0.00082	0.00114
2MM214WI	50	100	250	500	0.388	0.513	0.766	1.069	2.972	4.024	5.010	0.00044	0.00094	0.00109
2MM215WI	55	125	275	550	0.417	0.586	0.831	1.161	3.356	4.349	5.411	0.00057	0.00085	0.00111
2MM216WI	60	150	325	625	0.444	0.647	0.910	1.245	3.659	4.718	5.801	0.00067	0.0009	0.00112
2MM217WI	65	175	375	750	0.461	0.682	0.957	1.339	3.961	5.089	6.336	0.00075	0.00098	0.00131
2MM218WI	75	175	400	800	0.472	0.668	0.962	1.344	3.880	5.097	6.346	0.00071	0.0011	0.00139
2MM219WI	80	200	450	900	0.496	0.721	1.029	1.435	4.156	5.333	6.764	0.00079	0.00114	0.00146
2MM220WI	85	250	500	1000	0.508	0.787	1.070	1.494	4.550	5.718	7.124	0.00102	0.00108	0.00156
2MM222WI	100	300	600	1200	0.564	0.880	1.192	1.657	5.039	6.336	7.898	0.00111	0.00116	0.00169
2MM224WI	110	330	660	1320	0.588	0.908	1.233	1.716	5.300	6.667	8.311	0.00116	0.00123	0.00179
2MM226WI	125	370	740	1480	0.693	1.066	1.443	2.003	6.229	7.847	9.793	0.0011	0.00118	0.00172
2MM230WI	155	425	850	1700	0.745	1.102	1.480	2.036	6.500	8.218	10.280	0.00116	0.00132	0.00194

Notes: (1) For DB or DF arrangements only. For other mounting arrangements contact your Timken representative.

LIGHT 3MM200WI (ISO 02) SERIES

DUPLEX PERFORMANCE DATA

MOUNTING ARRANGEMENTS

Suggested
DB

Tandem
DT

Special Applications
DF

Bearing Number	PRELOAD				AXIAL STIFFNESS(1)			RADIAL STIFFNESS(1)			SPACER OFFSETS(1)		
	DUX	DUL	DUM	DUH	Light	Medium	Heavy	Light	Medium	Heavy	X-Light to Light	Light to Medium	Medium to Heavy
	N				N/µm			N/µm			µm		
METRIC DUPLEX PERFORMANCE DATA 3MM200WI SERIES													
3MM200WI	—	40	130	270	39.35	59.99	79.75	84.65	121.38	150.94	—	7.11	7.62
3MM201WI	—	40	130	270	44.77	67.51	88.85	94.10	135.90	169.48	—	6.35	6.86
3MM202WI	—	70	180	360	55.44	80.45	106.51	115.96	160.21	199.39	—	6.60	6.60
3MM203WI	—	90	330	440	63.84	105.99	119.28	132.92	204.46	223.87	—	11.43	4.06
3MM204WI	—	130	360	560	75.21	109.66	131.35	159.51	220.02	253.26	—	9.65	6.60
3MM205WI	—	160	400	670	89.20	128.20	157.76	189.59	258.50	303.98	—	8.89	7.37
3MM206WI	—	220	560	890	106.16	150.76	182.42	227.02	306.77	356.10	—	10.41	7.87
3MM207WI	130	310	780	1330	126.45	179.62	223.52	267.42	360.99	428.33	6.86	12.19	12.19
3MM208WI	160	360	890	1330	132.57	187.84	220.90	275.64	372.71	423.96	7.11	13.21	8.64
3MM209WI	180	440	1110	1780	159.86	226.85	274.24	332.14	448.44	520.50	7.87	13.72	10.67
3MM210WI	200	490	1220	2000	173.68	246.43	300.65	360.12	486.22	568.25	7.62	13.97	11.43
3MM211WI	220	620	1560	2450	193.61	274.94	330.21	407.34	549.71	634.36	9.65	15.75	11.68
3MM212WI	240	760	1890	2890	213.73	303.63	360.47	450.02	607.43	695.05	11.18	17.53	11.94
3MM213WI	270	850	2110	3340	225.62	320.42	385.65	474.50	640.48	740.18	11.94	18.54	13.72
3MM214WI	290	890	2220	3560	231.39	328.46	397.37	492.87	665.67	772.53	12.19	19.05	14.73
3MM215WI	360	980	2450	3780	250.28	355.75	424.13	532.75	719.19	825.53	11.68	19.30	13.72
3MM216WI	400	1110	2780	4450	269.87	383.03	462.79	570.35	770.61	894.61	12.45	20.32	15.75
3MM217WI	440	1200	3000	4890	280.36	397.37	483.42	600.43	812.41	949.18	12.45	21.08	17.02
3MM218WI	490	1330	3110	5560	286.14	394.75	498.12	608.83	805.06	968.42	13.72	20.83	21.84
3MM219WI	560	1560	3110	6230	310.27	402.97	531.00	655.70	824.65	1029.29	15.24	17.27	26.67
3MM220WI	600	1730	3470	6940	328.29	426.41	561.60	694.18	873.45	1090.50	16.26	18.29	27.94
3MM222WI	690	2050	4082	8180	359.94	466.81	613.90	762.39	960.03	1199.46	17.78	19.81	30.23
3MM224WI	820	2250	4480	8980	377.78	490.07	643.98	805.76	1014.77	1267.85	17.53	20.57	31.50
3MM226WI	980	2560	5120	10230	448.09	580.49	761.86	954.08	1190.72	1503.97	16.51	19.81	30.48
3MM230WI	1290	3110	6230	12450	473.63	612.32	801.04	1009.87	1276.25	1598.24	17.53	22.86	35.05
	lbs.				10^6lbs./in.			10^6lbs./in.			in.		
INCH DUPLEX PERFORMANCE DATA 3MM200WI SERIES													
3MM200WI	—	10	30	60	0.225	0.343	0.456	0.484	0.694	0.863	—	0.00028	0.00030
3MM201WI	—	10	30	60	0.256	0.386	0.508	0.538	0.777	0.969	—	0.00025	0.00027
3MM202WI	—	15	40	80	0.317	0.460	0.609	0.663	0.916	1.140	—	0.00026	0.00026
3MM203WI	—	20	75	100	0.365	0.606	0.682	0.76	1.169	1.280	—	0.00045	0.00016
3MM204WI	—	30	80	125	0.430	0.627	0.751	0.912	1.258	1.448	—	0.00038	0.00026
3MM205WI	—	35	90	150	0.510	0.733	0.902	1.084	1.478	1.738	—	0.00035	0.00029
3MM206WI	—	50	125	200	0.607	0.862	1.043	1.298	1.754	2.036	—	0.00041	0.00031
3MM207WI	30	70	175	300	0.723	1.027	1.278	1.529	2.064	2.449	0.00027	0.00048	0.00048
3MM208WI	35	80	200	300	0.758	1.074	1.263	1.576	2.131	2.424	0.00028	0.00052	0.00034
3MM209WI	40	100	250	400	0.914	1.297	1.568	1.899	2.564	2.976	0.00031	0.00054	0.00042
3MM210WI	45	110	275	450	0.993	1.409	1.719	2.059	2.780	3.249	0.00030	0.00055	0.00045
3MM211WI	50	140	350	550	1.107	1.572	1.888	2.329	3.143	3.627	0.00038	0.00062	0.00046
3MM212WI	55	170	425	650	1.222	1.736	2.061	2.573	3.473	3.974	0.00044	0.00069	0.00047
3MM213WI	60	190	475	750	1.290	1.832	2.205	2.713	3.662	4.232	0.00047	0.00073	0.00054
3MM214WI	65	200	500	800	1.323	1.878	2.272	2.818	3.806	4.417	0.00048	0.00075	0.00058
3MM215WI	80	220	550	850	1.431	2.034	2.425	3.046	4.112	4.720	0.00046	0.00076	0.00054
3MM216WI	90	250	625	1000	1.543	2.190	2.646	3.261	4.406	5.115	0.00049	0.00080	0.00062
3MM217WI	100	270	675	1100	1.603	2.272	2.764	3.433	4.645	5.427	0.00049	0.00083	0.00067
3MM218WI	110	300	700	1250	1.636	2.257	2.848	3.481	4.603	5.537	0.00054	0.00082	0.00086
3MM219WI	125	350	700	1400	1.774	2.304	3.036	3.749	4.715	5.885	0.00060	0.00068	0.00105
3MM220WI	135	390	780	1560	1.877	2.438	3.211	3.969	4.994	6.235	0.00064	0.00072	0.00110
3MM222WI	155	460	920	1840	2.058	2.669	3.510	4.359	5.489	6.858	0.00070	0.00078	0.00119
3MM224WI	185	505	1010	2020	2.160	2.802	3.682	4.607	5.802	7.249	0.00069	0.00081	0.00124
3MM226WI	220	575	1150	2300	2.562	3.319	4.356	5.455	6.808	8.599	0.00065	0.00078	0.00120
3MM230WI	290	700	1400	2800	2.708	3.501	4.580	5.774	7.297	9.138	0.00069	0.00090	0.00138

Notes: (1) For DB or DF arrangements only. For other mounting arrangements contact your Timken representative.

D

LIGHT 2MM200WI (ISO 02) SERIES

SPEED CAPABILITY DATA

Bearing Number	Grease Capacity NBU15 25%	Grease Capacity NBU15 40%	Kluber Isoflex NBU15 15%	Kluber Isoflex NBU15 20%	Operating Speeds[2] (DB Mounting)[1] Grease DUL	Grease DUM	Grease DUH	Oil DUL	Oil DUM	Oil DUH
	grams	grams	grams	grams	RPM	RPM	RPM	RPM	RPM	RPM
2MM200WI	0.30	0.50	0.20	0.27	50200	37700	25100	85300	64100	42700
2MM201WI	0.40	0.60	0.25	0.33	45400	34000	22200	79100	57800	39400
2MM202WI	0.50	0.80	0.32	0.43	38200	28700	19100	66300	48800	33200
2MM203WI	0.70	1.10	0.45	0.59	33500	25100	16500	58100	42700	29100
2MM204WI	1.10	1.70	0.72	0.96	28600	21400	14300	48600	36400	24300
2MM205WI	1.30	2.10	0.88	1.18	23800	17900	11900	40500	30400	20200
2MM206WI	2.00	3.10	1.31	1.74	20000	15100	10000	34200	25600	17000
2MM207WI	2.70	4.40	1.82	2.43	17300	13,000	8600	29400	22000	14600
2MM208WI	3.70	6.00	2.49	3.32	15400	11600	7700	26200	19700	13100
2MM209WI	4.20	6.60	2.77	3.70	14000	10500	7000	22800	17900	11900
2MM210WI	4.80	7.60	3.20	4.30	12500	9600	6400	21800	16300	10900
2MM211WI	6.10	9.70	4.10	5.40	11600	8700	5800	19700	14800	9900
2MM212WI	7.50	12.00	5.00	6.70	10600	7920	5300	18000	13500	9000
2MM213WI	9.20	14.60	6.10	8.10	9700	7260	4800	16500	12300	8200
2MM214WI	10.60	16.90	7.00	9.40	9100	6840	4600	15500	11600	7800
2MM215WI	11.60	18.60	7.80	10.30	8600	6480	4300	14600	11020	7300
2MM216WI	13.70	22.00	9.20	12.20	8100	6060	4000	13800	10300	6800
2MM217WI	16.90	27.10	11.30	15.10	7500	5640	3800	12800	9590	6500
2MM218WI	21.50	34.40	14.40	19.10	7100	5340	3600	12100	9080	6100
2MM219WI	25.80	41.40	17.30	23.00	6700	5040	3400	11400	8570	5800
2MM220WI	30.70	49.10	20.50	27.30	6400	4800	3200	10900	8160	5400
2MM222WI	42.30	67.60	28.20	37.60	5800	4320	2900	9900	7340	4900
2MM224WI	51.40	82.30	34.30	45.80	5400	4020	2700	9200	6830	4600
2MM226WI	50.80	81.30	33.90	45.20	4900	3660	2400	8300	6220	4100
2MM230WI	82.40	131.90	55.00	73.40	4200	3180	2160	7100	5410	3600

[1] For other mounting arrangement configurations refer to the engineering section on Permissible Speed calculation methods.
[2] For ceramic ball complements use 120% of speeds shown.

LIGHT 3MM200WI (ISO 02) SERIES

SPEED CAPABILITY DATA

Bearing Number	Grease Capacity NBU15		Kluber Isoflex NBU15		Operating Speeds[2] (DB Mounting)[1]					
	25%	40%	15%	20%	DUL	Grease DUM	DUH	DUL	Oil DUM	DUH
	grams	grams	grams	grams	RPM	RPM	RPM	RPM	RPM	RPM
3MM200WI	0.30	0.50	0.20	0.27	45180	33930	22590	76770	57690	38430
3MM201WI	0.40	0.60	0.25	0.33	40860	30600	19980	71190	52020	35460
3MM202WI	0.50	0.80	0.32	0.43	34380	25830	17190	59670	43920	29880
3MM203WI	0.70	1.10	0.45	0.59	30150	22590	14850	52290	38430	26190
3MM204WI	1.10	1.70	0.72	0.96	25740	19260	12870	43740	32760	21870
3MM205WI	1.30	2.10	0.88	1.18	21420	16110	10710	36450	27360	18180
3MM206WI	2.00	3.10	1.31	1.74	18000	13590	9000	30780	23040	15300
3MM207WI	2.70	4.40	1.82	2.43	15570	11700	7740	26460	19800	13140
3MM208WI	3.70	6.00	2.49	3.32	13860	10440	6930	23580	17730	11790
3MM209WI	4.20	6.60	2.77	3.70	12600	9450	6300	20520	16110	10710
3MM210WI	4.80	7.60	3.20	4.30	11250	8640	5760	19620	14670	9810
3MM211WI	6.10	9.70	4.10	5.40	10440	7830	5220	17730	13320	8910
3MM212WI	7.50	12.00	5.00	6.70	9540	7128	4770	16200	12150	8100
3MM213WI	9.20	14.60	6.10	8.10	8730	6534	4320	14850	11070	7380
3MM214WI	10.60	16.90	7.00	9.40	8190	6156	4140	13950	10440	7020
3MM215WI	11.60	18.60	7.80	10.30	7740	5832	3870	13140	9918	6570
3MM216WI	13.70	22.00	9.20	12.20	7290	5454	3600	12420	9270	6120
3MM217WI	16.90	27.10	11.30	15.10	6750	5076	3420	11520	8631	5850
3MM218WI	21.50	34.40	14.40	19.10	6390	4806	3240	10890	8172	5490
3MM219WI	25.80	41.40	17.30	23.00	6030	4536	3060	10260	7713	5220
3MM220WI	30.70	49.10	20.50	27.30	5760	4320	2880	9810	7344	4860
3MM222WI	42.30	67.60	28.20	37.60	5220	3888	2610	8910	6606	4410
3MM224WI	51.40	82.30	34.30	45.80	4860	3618	2430	8280	6147	4140
3MM226WI	50.80	81.30	33.90	45.20	4410	3294	2160	7470	5598	3690
3MM230WI	82.40	131.90	55.00	73.40	3780	2862	1944	6390	4869	3240

[1] For other mounting arrangement configurations refer to the engineering section on Permissible Speed calculation methods.
[2] For ceramic ball complements use 120% of speeds shown.

LIGHT
MM200K
(ISO 02) SERIES

DIMENSIONAL SIZES
METRIC

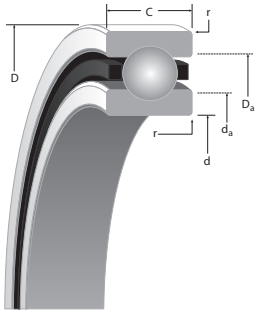

SUPER PRECISION MM:
Running accuracy and performance meet ABEC 9 (ISO P2) levels. Non-critical features conform to ABEC 7 (ISO P4) requirements.

CONRAD CONSTRUCTION:
- Maximum complement of balls seperated by two-piece land piloted cage.

Bearing Number	d Bore	D O.D.	C Width(1)	Ball Qty. x Dia.	Wt.	LOAD RATINGS (steel ball & ceramic ball) C_o (stat)	C_e (dyn)	Limiting Speed(Ng)
METRIC	mm/tol: +0; -(µm)			mm	kg	N		RPM
MM201K	12 (4)	32 (6)	10 (80)	7 x 5.95	0.035	3000 2710	7550 7550	52200 62600
MM202K	15 (4)	35 (6)	11 (80)	8 x 5.95	0.043	3700 3290	8450 8450	44000 52800
MM203K	17 (4)	40 (6)	12 (80)	8 x 6.75	0.062	4700 4230	10600 10600	38500 46200
MM204K	20 (5)	47 (6)	14 (130)	8 x 7.94	0.1	6500 5860	14200 14200	32800 39400
MM205K	25 (5)	52 (7)	15 (130)	9 x 7.94	0.122	7800 6980	15500 15500	27400 32900
MM206K	30 (5)	62 (7)	16 (130)	9 x 9.53	0.185	11300 10000	21600 21600	23000 27600
MM207K	35 (6)	72 (7)	17 (130)	9 x 11.11	0.267	15300 13600	28500 28500	19800 23800
MM208K	40 (6)	80 (7)	18 (130)	9 x 12.70	0.337	20000 17700	36200 36200	17700 21200
MM209K	45 (6)	85 (8)	19 (130)	9 x 12.70	0.377	20200 18200	36300 36300	16000 19200
MM210K	50 (6)	90 (8)	20 (130)	10 x 12.70	0.425	23100 20600	38900 38900	14600 17500
MM211K	55 (7)	100 (8)	21 (150)	10 x 14.29	0.564	29100 26000	48100 48100	13300 16000
MM212K	60 (7)	110 (8)	22 (150)	10 x 15.88	0.727	36300 32000	58200 58200	12100 14500
MM213K	65 (7)	120 (8)	23 (150)	10 x 16.67	0.928	40000 35600	63400 63400	11100 13300
MM214K	70 (7)	125 (9)	24 (150)	10 x 17.46	0.994	43600 39200	69000 69000	10500 12600
MM215K	75 (7)	130 (9)	25 (150)	10 x 17.46	1.074	44500 39900	68900 68900	9900 11900
MM216K	80 (7)	140 (9)	26 (150)	10 x 19.05	1.317	53400 47200	80600 80600	9200 11000

(Ng) For a single, grease lubricated, spring preloaded bearing. This value to be used in permissible Operating Speed (Sp) calculation.
(1) Width tolerance of preloaded bearing set +0/-0.25 mm (+0/-0.010").
(2) ABMA STD 20 (r_{as} max).

r Rad.(2)	Suggested Shoulder Diameters d_a (Shaft) Max.	d_a (Shaft) Min.	D_a (Housing) Max.	D_a (Housing) Min.	Shaft Diameter Min.	Shaft Diameter Max.	Mounting Fits Loose	Mounting Fits Tight	FIXED Housing Bore (Stationary) Min.	FIXED Housing Bore (Stationary) Max.	FIXED Mounting Fits Tight	FIXED Mounting Fits Loose	FLOATING Housing Bore (Stationary) Max.	FLOATING Housing Bore (Stationary) Min.	FLOATING Housing Clearance Max.	FLOATING Housing Clearance Min.	
mm	mm	mm	mm	mm	mm	mm	in.	in.	in.	in.	in.	in.	in.	in.	in.	in.	
0.6	16.6	16.4	28.1	27.8	11.9950	12.000	0.005	0.004	32	32.005	0.000	0.011	32.010	32.005	0.016	0.005	MM201K
0.6	19.2	18.9	31.1	30.9	14.9950	15.000	0.005	0.004	35	35.006	0.000	0.012	35.010	35.005	0.016	0.005	MM202K
0.6	21.7	21.5	35.7	35.4	16.9950	17.000	0.005	0.004	40	40.006	0.000	0.012	40.010	40.005	0.016	0.005	MM203K
1	26	25.8	41.5	41.3	19.9950	20.000	0.005	0.005	47	47.006	0.000	0.012	47.012	47.007	0.018	0.007	MM204K
1	31.1	30.9	47.1	46.9	24.9950	25.000	0.005	0.005	52	52.006	0.000	0.013	52.012	52.007	0.019	0.007	MM205K
1	36.7	36.5	56	55.8	29.9950	30.000	0.005	0.005	62	62.008	0.000	0.015	62.012	62.007	0.019	0.007	MM206K
1	42.7	42.2	65.3	64.8	34.9950	35.000	0.005	0.006	72	72.008	0.000	0.015	72.011	72.007	0.019	0.007	MM207K
1	47.8	47.2	73.2	72.6	39.9950	40.000	0.005	0.006	80	80.008	0.000	0.015	80.012	80.008	0.020	0.008	MM208K
1	52.8	52.3	78.2	77.7	44.9950	45.000	0.005	0.006	85	85.008	0.000	0.016	85.016	85.009	0.024	0.009	MM209K
1	57.9	57.4	83.3	82.8	49.9950	50.000	0.005	0.006	90	90.008	0.000	0.016	90.015	90.007	0.023	0.007	MM210K
1.5	63.8	63.3	92.2	91.7	54.9950	55.000	0.005	0.007	100	100.008	0.000	0.016	100.018	100.010	0.025	0.010	MM211K
1.5	69.9	69.3	101.4	100.8	59.9950	60.000	0.005	0.007	110	110.008	0.000	0.016	110.018	110.010	0.025	0.010	MM212K
1.5	76.2	75.7	109.7	109.2	64.9950	65.000	0.005	0.007	120	120.008	0.000	0.016	120.018	120.010	0.025	0.010	MM213K
1.5	80.8	80.3	115.8	115.3	69.9950	70.000	0.005	0.007	125	125.008	0.000	0.017	125.021	125.011	0.030	0.011	MM214K
1.5	86	85.2	120.8	120	74.9950	75.005	0.005	0.012	130	130.009	0.000	0.018	130.020	130.010	0.029	0.010	MM215K
2	91.3	90.6	129.9	129.2	79.9950	80.005	0.005	0.012	140	140.009	0.000	0.018	140.020	140.010	0.029	0.010	MM216K

LIGHT
MM200K
(ISO 02) SERIES

DIMENSIONAL SIZES
INCHES

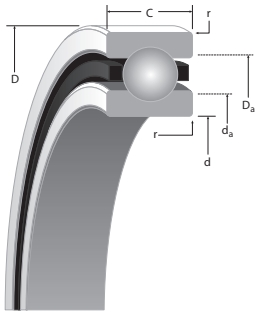

SUPER PRECISION MM:
Running accuracy and performance meet ABEC 9 (ISO P2) levels. Non-critical features conform to ABEC 7 (ISO P4) requirements.

CONRAD CONSTRUCTION:
- Maximum complement of balls seperated by two-piece land piloted cage.

Bearing Number	d Bore	D O.D.	C Width(1)	Ball Qty. x Dia.	Wt.	LOAD RATINGS (steel ball & ceramic ball) C_o (stat)	C_e(dyn)	Limiting Speed(Ng)
INCH	in./tol: +0; -.000(µm)			in.	lbs.	lbs.		RPM
MM201K	0.4724 (1.5)	1.2598 (2.5)	0.394 (31)	7 x 15/64	0.08	680 610	1700 1700	52200 62600
MM202K	0.5906 (1.5)	1.378 (2.5)	0.4331 (31)	8 x 15/64	0.09	830 740	1900 1900	44000 52800
MM203K	0.6693 (1.5)	1.5748 (2.5)	0.4724 (31)	8 x 17/64	0.14	1060 950	2380 2380	38500 46200
MM204K	0.7874 (2)	1.8504 (2.5)	0.5512 (47)	8 x 5/16	0.22	1460 1320	3190 3190	32800 39400
MM205K	0.9843 (2)	2.0472 (3)	0.5906 (47)	9 x 5/16	0.27	1760 1570	3490 3490	27400 32900
MM206K	1.1811 (2)	2.4409 (3)	0.6299 (47)	9 x 3/8	0.41	2550 2.25	4850 4850	23000 27600
MM207K	1.378 (2.5)	2.8346 (3)	0.6693 (47)	9 x 7/16	0.59	3450 3060	6400 6400	19800 23800
MM208K	1.5748 (2.5)	3.1496 (3)	0.7087 (47)	9 x 1/2	0.74	4500 3970	8130 8130	17700 21200
MM209K	1.7717 (2.5)	3.3465 (3)	0.748 (47)	9 x 1/2	0.83	4550 4090	8160 8160	16000 19200
MM210K	1.9685 (2.5)	3.5433 (3)	0.7874 (47)	10 x 1/2	0.94	5200 4640	8740 8740	14600 17500
MM211K	2.1654 (3)	3.937 (3)	0.8268 (59)	10 x 9/16	1.24	6550 5850	10800 10800	13300 16000
MM212K	2.3622 (3)	4.3307 (3)	0.8661 (59)	10 x 5/8	1.60	8150 7190	13100 13100	12100 14500
MM213K	2.5591 (3)	4.7244 (3)	0.9055 (59)	10 x 21/32	2.05	9000 8000	14300 14300	11100 13300
MM214K	2.7559 (3)	4.9213 (3.5)	0.9449 (59)	10 x 11/16	2.19	9800 8800	15500 15500	10500 12600
MM215K	2.9528 (3)	5.1181 (3.5)	0.9843 (59)	10 x 11/16	2.37	10000 8960	15500 15500	9900 11900
MM216K	3.1496 (3)	5.5118 (3.5)	1.0236 (59)	10 x 3/4	2.9	12000 10600	18100 18100	9200 11000

(Ng) For a single, grease lubricated, spring preloaded bearing. This value to be used in permissible Operating Speed (Sp) calculation.
(1) Width tolerance of preloaded bearing set +0/-0.25 mm (+0/-0.010").
(2) ABMA STD 20 (r_{as} max).

r	Suggested Shoulder Diameters				Shaft Diameter		Mounting Fits		FIXED				FLOATING				
	d_a (Shaft)		D_a (Housing)						Housing Bore (Stationary)		Mounting Fits		Housing Bore (Stationary)		Housing Clearance		
Rad.[2]	Max.	Min.	Max.	Min.	Min.	Max.	Loose	Tight	Min.	Max.	Tight	Loose	Max.	Min.	Max.	Min.	
in.	in.	in.	in.	in.	in.	in.	in.	in.	in.	in.	in.	in.	in.	in.	in.	in.	
0.024	0.66	0.65	1.11	1.10	0.4722	0.4724	0.0002	0.00015	1.2598	1.2600	0.000	0.00045	1.26020	1.26000	0.00070	0.00020	MM201K
0.024	0.76	0.75	1.23	1.22	0.5904	0.5906	0.0002	0.00015	1.3780	1.3783	0.000	0.0005	1.37840	1.37820	0.00070	0.00020	MM202K
0.024	0.86	0.85	1.41	1.40	0.6691	0.6693	0.0002	0.00015	1.5748	1.5751	0.000	0.0005	1.57520	1.57500	0.00070	0.00020	MM203K
0.039	1.03	1.02	1.64	1.63	0.7872	0.7874	0.0002	0.0002	1.8504	1.8507	0.000	0.0005	1.85090	1.85070	0.00080	0.00030	MM204K
0.039	1.23	1.22	1.86	1.85	0.9841	0.9843	0.0002	0.0002	2.0472	2.0475	0.000	0.00055	2.04770	2.04750	0.00080	0.00030	MM205K
0.039	1.45	1.44	2.21	2.20	1.1809	1.1811	0.0002	0.0002	2.4409	2.4412	0.000	0.0006	2.44140	2.44120	0.00080	0.00030	MM206K
0.039	1.68	1.66	2.57	2.55	1.3778	1.3780	0.0002	0.00025	2.8346	2.8349	0.000	0.0006	2.83510	2.83490	0.00080	0.00030	MM207K
0.039	1.88	1.86	2.88	2.86	1.5746	1.5748	0.0002	0.00025	3.1496	3.1499	0.000	0.0006	3.15010	3.14990	0.00080	0.00030	MM208K
0.039	2.08	2.06	3.08	3.06	1.7715	1.7717	0.0002	0.00025	3.3465	3.3468	0.000	0.0006	3.34710	3.34680	0.00090	0.00030	MM209K
0.039	2.28	2.26	3.28	3.26	1.9683	1.9685	0.0002	0.00025	3.5433	3.5436	0.000	0.0006	3.54390	3.54360	0.00090	0.00030	MM210K
0.059	2.51	2.49	3.63	3.61	2.1652	2.1654	0.0002	0.0003	3.9370	3.9373	0.000	0.0006	3.93770	3.93740	0.00100	0.00040	MM211K
0.059	2.75	2.73	3.99	3.97	2.3620	2.3622	0.0002	0.0003	4.3307	4.3310	0.000	0.0006	4.33140	4.33110	0.00100	0.00040	MM212K
0.059	3.00	2.98	4.32	4.30	2.5589	2.5591	0.0002	0.0003	4.7244	4.7247	0.000	0.0006	4.72510	4.72480	0.00100	0.00040	MM213K
0.059	3.18	3.16	4.56	4.54	2.7557	2.7559	0.0002	0.0003	4.9213	4.9216	0.000	0.0007	4.92210	4.92170	0.00120	0.00040	MM214K
0.059	3.39	3.36	4.76	4.73	2.9526	2.9530	0.0002	0.0005	5.1181	5.1185	0.000	0.0007	5.11890	5.11850	0.00110	0.00040	MM215K
0.079	3.60	3.57	5.12	5.09	3.1494	3.1498	0.0002	0.0005	5.5118	5.5122	0.000	0.0007	5.51260	5.51220	0.00110	0.00040	MM216K

MEDIUM 2(3)MM300WI (ISO 03) SERIES

DIMENSIONAL SERIES METRIC

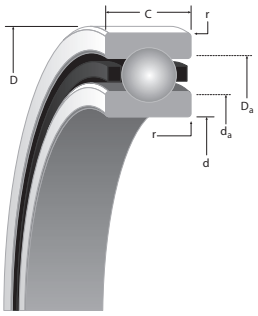

SUPER PRECISION MM:

Running accuracy and performance meet ABEC 9 (ISO P2) levels. Non-critical features conform to ABEC 7 (ISO P4) requirements.

WI CONSTRUCTION:

- Incorporates low shoulder on non-thrust side of outer rings.
- Maximum complement of balls separated by one-piece cage piloted against a ground thrust shoulder land of the outer ring.

Bearing Number						(2MM) LOAD RATINGS (steel ball & ceramic ball)			(3MM) LOAD RATINGS (steel ball & ceramic ball)		
2MM or 3MM	d Bore	D O.D.	C Width(1)	Ball Qty. x Dia.	Wt.	C_o (stat)	C_e (dyn)	Limiting Speed(Ng)	C_o (stat)	C_e (dyn)	Limiting Speed(Ng)
METRIC	mm/tol: +0; -(µm)			mm	kg	N		RPM	N		RPM
301WI	12 (4)	37 (6)	12 (80)	8 x 7.14	0.061	4700 4230	11000 11000	47600 57100	4600 4060	10900 10900	42800 51400
302WI	15 (4)	42 (6)	13 (80)	10 x 6.75	0.087	5810 5170	12900 12900	38100 45700	5600 5000	11600 11600	34300 41200
303WI	17 (4)	47 (6)	14 (80)	7 x 9.53	0.104	7280 6480	16900 16900	36800 44200	7100 6300	16400 16400	33100 39700
304WI	20 (5)	52 (7)	15 (120)	8 x 10.32	0.137	10000 8900	21500 21500	32200 38600	9650 8590	20900 20900	29000 34800
305WI	25 (5)	62 (7)	17 (120)	9 x 11.91	0.221	15300 13600	30500 30500	26200 31400	14800 13200	29500 29500	23600 28300
306WI	30 (5)	72 (7)	19 (120)	10 x 13.49	0.328	22200 19800	34120 34120	22100 26500	21500 19100	39900 39900	19900 23900
307WI	35 (6)	80 (7)	21 (120)	10 x 14.29	0.443	25600 22800	46200 46200	19200 23000	24700 22000	44500 44500	17300 20800
308WI	40 (6)	90 (8)	23 (120)	11 x 15.88	0.608	35000 31200	59700 59700	16900 20300	38900 30100	57500 57500	15200 18200
309WI	45 (6)	100 (8)	25 (120)	10 x 17.46	0.809	38700 34500	66500 66500	15100 18100	37400 33300	64100 64100	13600 16300
310WI	50 (6)	110 (8)	27 (120)	10 x 19.05	1.046	46200 41200	77900 77900	13600 16300	44700 39800	75100 75100	12200 14600
311WI	55 (7)	120 (8)	29 (150)	10 x 20.64	1.332	54600 48600	90200 90200	12400 14900	52600 46800	86700 86700	11200 13400
312WI	60 (7)	130 (9)	31 (150)	10 x 22.23	1.665	63500 56600	103100 103100	11400 13700	61100 54400	99100 99100	10300 12400
313WI	65 (7)	140 (9)	33 (150)	11 x 23.81	2.101	80500 71700	124400 124400	10500 12600	77400 68900	119700 119700	9500 11400
314WI	70 (7)	150 (9)	35 (150)	11 x 25.40	2.548	91900 81800	139900 139900	9800 11800	88300 78500	134500 134500	8800 10600
319WI	95 (7)	200 (10)	45 (200)	10 x 34.93	5.587	155900 138800	204400 204400	7400 8900	150400 133900	196800 196800	6700 8000

(Ng) For a single, grease lubricated, spring preloaded bearing. This value to be used in permissible Operating Speed (Sp) calculation.
(1) Width tolerance of preloaded bearing set +0/-0.25 mm (+0/-0.010").
(2) ABMA STD 20 (r_{as} max).

r Rad.[2]	Suggested Shoulder Diameters d_a (Shaft) Max.	d_a (Shaft) Min.	D_a (Housing) Max.	D_a (Housing) Min.	Shaft Diameter Min.	Shaft Diameter Max.	Mounting Fits Loose	Mounting Fits Tight	FIXED Housing Bore (Stationary) Min.	FIXED Housing Bore (Stationary) Max.	FIXED Mounting Fits (Stationary) Tight	FIXED Mounting Fits (Stationary) Loose	FLOATING Housing Bore Max.	FLOATING Housing Bore Min.	FLOATING Housing Clearance Max.	FLOATING Housing Clearance Min.	Bearing Number 2MM or 3MM
mm	mm	mm	mm	mm	mm	mm	mm	mm	mm	mm	mm	mm	mm	mm	mm	mm	
1	17.7	17.4	32.1	31.9	11.995	12.000	0.005	0.004	37.000	37.006	0.000	0.012	37.010	37.005	0.016	0.005	301WI
1	22.2	22.0	35.7	35.4	14.995	15.000	0.005	0.004	42.000	42.006	0.000	0.012	42.010	42.005	0.016	0.005	302WI
1	22.7	22.5	42.0	41.8	16.995	17.000	0.005	0.004	47.000	47.006	0.000	0.012	47.012	47.007	0.018	0.007	303WI
1	30.1	29.9	46.6	46.4	19.995	20.000	0.005	0.005	52.000	52.006	0.000	0.013	52.012	52.007	0.019	0.007	304WI
1	32.1	31.9	55.8	55.5	24.995	25.000	0.005	0.005	62.000	62.008	0.000	0.015	62.012	62.007	0.019	0.007	305WI
1	37.7	37.5	65.2	64.9	29.995	30.000	0.005	0.005	72.000	72.008	0.000	0.015	72.011	72.007	0.019	0.007	306WI
1.5	43.7	43.2	72.1	71.6	34.995	35.000	0.005	0.006	80.000	80.008	0.000	0.015	80.012	80.008	0.020	0.008	307WI
1.5	49.8	49.3	81.3	80.8	39.995	40.000	0.005	0.006	90.000	90.008	0.000	0.016	90.015	90.007	0.023	0.007	308WI
1.5	55.9	55.4	90.2	89.7	44.995	45.000	0.005	0.006	100.000	100.008	0.000	0.016	100.018	100.010	0.025	0.010	309WI
2	61.2	60.7	99.8	99.3	49.995	50.000	0.005	0.006	110.000	110.008	0.000	0.016	110.018	110.010	0.025	0.010	310WI
2	67.3	66.8	108.7	108.2	54.995	55.000	0.005	0.007	120.000	120.008	0.000	0.016	120.018	120.010	0.025	0.010	311WI
2	43.2	72.6	117.9	117.3	59.995	60.000	0.005	0.007	130.000	130.009	0.000	0.018	130.020	130.010	0.029	0.010	312WI
2	80.3	79.8	126.8	126.2	64.995	65.000	0.005	0.007	140.000	140.009	0.000	0.018	140.020	140.010	0.029	0.010	313WI
2	85.3	84.8	135.6	135.1	69.995	70.000	0.005	0.007	150.000	150.009	0.000	0.018	150.023	150.012	0.032	0.012	314WI
3	113.2	112.4	183.3	182.5	94.995	95.000	0.005	0.013	200.00	200.011	0.000	0.022	200.025	200.015	0.036	0.015	319WI

MEDIUM 2(3)MM300WI (ISO 03) SERIES

DIMENSIONAL SERIES INCHES

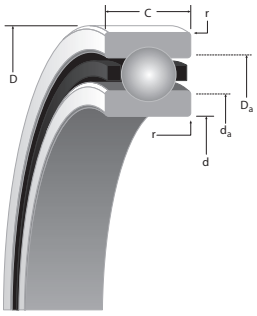

SUPER PRECISION MM:

Running accuracy and performance meet ABEC 9 (ISO P2) levels. Non-critical features conform to ABEC 7 (ISO P4) requirements.

WI CONSTRUCTION:

- Incorporates low shoulder on non-thrust side of outer rings.
- Maximum complement of balls separated by one-piece cage piloted against a ground thrust shoulder land of the outer ring.

Bearing Number						(2MM) LOAD RATINGS (steel ball & ceramic ball)			(3MM) LOAD RATINGS (steel ball & ceramic ball)		
2MM or 3MM	d Bore	D O.D.	C Width[1]	Ball Qty. x Dia.	Wt.	C_o (stat)	C_e (dyn)	Limiting Speed[Ng]	C_o (stat)	C_e (dyn)	Limiting Speed[Ng]
INCH	in/tol: +0; -.000(µm)			in.	lbs.	lbs.		RPM	lbs.		RPM
301WI	0.4724 (1.5)	1.4567 (2.5)	0.4724 (31)	8 x 9/32	0.13	1,060 950	2450 2450	47600 57100	1040 920	2450 2450	42800 51400
302WI	0.5906 (1.5)	1.6535 (2.5)	0.5118 (31)	10 x 17/64	0.19	1320 1160	2700 2700	38100 45700	1270 1120	2600 2600	34300 41200
303WI	0.6693 (1.5)	1.8504 (2.5)	0.5512 (31)	7 x 3/8	0.23	1630 1460	3900 3900	36800 44100	1600 1420	3690 3690	33100 39700
304WI	0.7874 (2)	2.0472 (3)	0.5906 (47)	8 x 13/32	0.30	2200 2000	4840 4840	32200 38600	2160 1930	4700 4700	29000 34800
305WI	0.9843 (2)	2.4409 (3)	0.6693 (47)	9 x 15/32	0.49	3450 3060	6850 6850	26200 31400	3350 2970	6630 6630	23600 28300
306WI	1.1811 (2)	2.8346 (3)	0.748 (47)	10 x 17/32	0.72	4990 4440	9270 9270	22100 26500	4820 4290	8960 8960	19900 23900
307WI	1.378 (2.5)	3.1496 (3)	0.8268 (47)	10 x 9/16	0.98	5700 5130	10400 10400	19200 23000	5600 4940	10000 10000	17300 20800
308WI	1.5748 (2.5)	3.5433 (3)	0.9055 (47)	11 x 5/8	1.34	7800 7010	13400 13400	16900 20300	7600 6770	12900 12900	15200 18200
309WI	1.7717 (2.5)	3.937 (3)	0.9843 (47)	10 x 11/16	1.78	8650 7750	15000 15000	15100 18100	8500 7480	14400 14400	13600 16300
310WI	1.9685 (2.5)	4.3307 (3)	1.063 (47)	10 x 3/4	2.31	10400 9250	17500 17500	13600 16300	10000 8940	16900 16900	12200 14600
311WI	2.1654 (3)	4.7244 (3)	1.1417 (59)	10 x 13/16	2.94	12200 10900	20300 20300	12400 14900	11800 10500	19500 19500	11200 13400
312WI	2.3622 (3)	5.1181 (3.5)	1.2205 (59)	10 x 7/8	3.67	14300 12700	23200 23200	11400 13700	13700 12200	22300 22300	10300 12400
313WI	2.5591 (3)	5.5118 (3.5)	1.2992 (59)	11 x 15/16	4.63	18000 16100	28000 28000	10500 12600	17300 15500	26900 26900	9500 11400
314WI	2.7559 (3)	5.9055 (3.5)	1.378 (59)	11 x 1	5.62	20800 18400	31500 31500	9800 11800	20000 17700	30200 30200	8800 10600
319WI	3.7402 (3)	7.8740 (4)	1.7717 (79)	10 x 1 3/8	12.32	35100 31200	46000 46000	7400 8900	33800 30100	44200 44200	6700 8000

[Ng] For a single, grease lubricated, spring preloaded bearing. This value to be used in permissible Operating Speed (Sp) calculation.
[1] Width tolerance of preloaded bearing set +0/-0.25 mm (+0/-0.010").
[2] ABMA STD 20 (r_{as} max).

r Rad.[2]	Suggested Shoulder Diameters d_a (Shaft) Max.	d_a (Shaft) Min.	D_a (Housing) Max.	D_a (Housing) Min.	Shaft Diameter Min.	Shaft Diameter Max.	Mounting Fits Loose	Mounting Fits Tight	FIXED Housing Bore (Stationary) Min.	FIXED Housing Bore (Stationary) Max.	FIXED Mounting Fits Might	FIXED Mounting Fits Loose	FLOATING Housing Bore (Stationary) Max.	FLOATING Housing Bore (Stationary) Min.	FLOATING Housing Clearance Max.	FLOATING Housing Clearance Min.	Bearing Number 2MM or 3MM
in.	in.	in.	in.	in.	in.	in.	in.	in.	in.	in.	in.	in.	in.	in.	in.	in.	
0.039	0.7	0.69	1.27	1.26	0.4722	0.4724	0.0002	0.00015	1.4567	1.4570	0.000	0.0005	1.45710	1.45690	0.00070	0.00020	301WI
0.039	0.88	0.87	1.41	1.4	0.5904	0.5906	0.0002	0.00015	1.6535	1.6538	0.000	0.0005	1.65390	1.65370	0.00070	0.00020	302WI
0.039	0.9	0.89	1.66	1.65	0.6691	0.6693	0.0002	0.00015	1.8504	1.8507	0.000	0.0005	1.85090	1.85070	0.00080	0.00030	303WI
0.039	1.19	1.18	1.84	1.83	0.7872	0.7874	0.0002	0.00020	2.0472	2.0475	0.000	0.00055	2.04770	2.04750	0.00080	0.00030	304WI
0.039	1.27	1.26	2.2	2.19	0.9841	0.9843	0.0002	0.00020	2.4409	2.4412	0.000	0.0006	2.44140	2.44120	0.00080	0.00030	305WI
0.039	1.49	1.48	2.57	2.56	1.1809	1.1811	0.0002	0.00020	2.8346	2.8349	0.000	0.0006	2.83510	2.83490	0.00080	0.00030	306WI
0.059	1.72	1.7	2.84	2.82	1.3778	1.3780	0.0002	0.00025	3.1496	3.1499	0.000	0.0006	3.15010	3.14990	0.00080	0.00030	307WI
0.059	1.96	1.94	3.2	3.18	1.5746	1.5748	0.0002	0.00025	3.5433	3.5436	0.000	0.0006	3.54390	3.54360	0.00090	0.00030	308WI
0.059	2.2	2.18	3.55	3.53	1.7715	1.7717	0.0002	0.00025	3.9370	3.9373	0.000	0.0006	3.93770	3.93740	0.00100	0.00040	309WI
0.079	2.41	2.39	3.93	3.91	1.9683	1.9685	0.0002	0.00025	4.3307	4.3310	0.000	0.0006	4.33140	4.33110	0.00100	0.00040	310WI
0.079	2.65	2.63	4.28	4.26	2.1652	2.1654	0.0002	0.00030	4.7244	4.7247	0.000	0.0006	4.72510	4.72480	0.00100	0.00040	311WI
0.079	2.88	2.86	4.64	4.62	2.3620	2.3622	0.0002	0.00030	5.1181	5.1185	0.000	0.0007	5.11890	5.11850	0.00110	0.00040	312WI
0.079	3.16	3.14	4.99	4.97	2.5589	2.5591	0.0002	0.00030	5.5118	5.5122	0.000	0.0007	5.51260	5.51220	0.00110	0.00040	313WI
0.079	3.36	3.34	5.34	5.32	2.7557	2.7559	0.0002	0.00030	5.9055	5.9059	0.000	0.0007	5.90640	5.90600	0.00120	0.00050	314WI

MEDIUM 2(3)MM300WI (ISO 03) SERIES

DUPLEX PERFORMANCE DATA

MOUNTING ARRANGEMENTS

Suggested
DB

Tandem
DT

Special Applications
DF

Bearing Number 2MM or 3MM	PRELOAD DUX	DUL	DUM	DUH	AXIAL STIFFNESS(1) X-light	Light	Medium	Heavy	RADIAL STIFFNESS(1) Light	Medium	Heavy	SPACER OFFSETS(1) X-Light to Light	Light to Medium	Medium to Heavy
	N				N/µm				N/µm			µm		
METRIC DUPLEX PERFORMANCE DATA 2MM300WI SERIES														
2MM301WI	—	20	70	180	—	17.49	27.81	44.25	98.82	153.56	183.30	—	7.87	12.45
2MM302WI	20	40	110	220	—	27.46	40.93	57.19	143.24	164.93	205.51	—	7.87	9.14
2MM303WI	40	70	160	310	—	26.58	38.83	54.57	147.44	197.46	263.05	—	10.92	13.46
2MM304WI	40	90	220	400	—	33.06	49.85	66.46	181.72	232.97	289.81	—	12.95	121.92
2MM305WI	90	160	330	620	—	46.17	65.24	88.50	247.83	283.16	340.88	—	12.7	14.99
2MM306WI	90	180	440	780	—	49.50	74.68	98.47	271.27	303.10	405.77	—	17.27	15.49
2MM307WI	110	220	560	1000	—	55.97	85.18	114.38	323.91	388.10	478.70	—	18.8	17.78
2MM308WI	130	290	670	1220	—	64.71	94.62	127.85	364.67	392.65	489.20	—	19.05	20.07
2MM309WI	180	330	780	1560	—	70.13	103.02	145.17	393.18	472.58	588.36	—	20.57	25.15
2MM310WI	220	440	1000	1780	—	81.15	117.36	156.01	366.24	496.89	637.86	—	22.35	22.86
2MM311WI	270	560	1110	2110	—	88.15	121.38	167.20	382.86	582.42	724.61	—	21.34	27.69
2MM312WI	270	560	1330	2450	—	89.72	133.80	180.85	456.31	632.26	802.44	—	27.94	28.19
2MM313WI	330	670	1670	3000	—	104.24	157.93	211.28	511.76	668.64	846.52	—	30.48	28.96
2MM314WI	400	780	1890	3450	—	110.89	166.33	224.22	519.80	703.80	876.25	—	32.26	32.00
2MM319WI	670	1330	3110	6230	—	140.44	206.03	290.33	726.88	932.74	1183.02	—	41.05	50.24

Bearing Number 2MM or 3MM	PRELOAD DUX	DUL	DUM	DUH	AXIAL STIFFNESS(1) X-light	Light	Medium	Heavy	RADIAL STIFFNESS(1) Light	Medium	Heavy	SPACER OFFSETS(1) X-Light to Light	Light to Medium	Medium to Heavy
	N				N/µm				N/µm			µm		
METRIC DUPLEX PERFORMANCE DATA 3MM300WI SERIES														
3MM301WI	40	90	180	310	—	58.59	76.61	96.37	94.10	135.90	169.48	—	5.33	6.10
3MM302WI	40	90	180	360	—	66.46	86.75	115.08	115.96	160.21	199.39	—	4.57	7.11
3MM303WI	40	110	270	440	—	63.66	89.02	109.49	132.92	204.46	223.87	—	8.13	7.11
3MM304WI	90	160	360	620	—	79.23	108.96	136.77	159.51	220.02	253.26	—	8.38	8.64
3MM305WI	110	220	530	890	—	101.62	142.19	174.90	189.59	258.50	303.98	—	10.16	8.89
3MM306WI	135	270	670	1110	—	112.29	159.33	196.06	227.02	306.77	356.10	—	11.68	9.91
3MM307WI	180	360	850	1560	—	134.85	187.84	241.01	267.42	360.99	428.33	—	12.19	13.21
3MM308WI	220	440	1110	1780	—	150.41	214.08	259.20	275.64	372.71	423.96	—	14.48	11.18
3MM309WI	270	530	1330	2220	—	165.98	235.94	290.51	332.14	448.44	520.50	—	15.75	13.46
3MM310WI	310	620	1560	2670	—	178.75	254.13	316.57	360.12	486.22	568.25	—	17.27	15.49
3MM311WI	400	780	1780	3110	—	198.16	272.32	342.10	407.34	549.71	634.36	—	17.02	17.27
3MM312WI	450	890	2000	3560	—	213.38	291.21	367.81	450.02	607.43	695.05	—	17.53	18.80
3MM313WI	560	1110	2670	4450	—	249.23	348.93	429.55	474.50	640.48	740.18	—	20.83	18.29
3MM314WI	620	1220	2890	5120	—	262.52	365.02	460.34	492.87	665.67	772.53	—	21.08	21.59
3MM319WI	1070	2110	4890	8900	—	328.81	453.52	578.22	655.70	824.65	1029.29	—	28.19	30.99

Notes: (1) For DB or DF arrangements only. For other mounting arrangements contact your Timken representative.

MEDIUM 2(3)MM300WI (ISO 03) SERIES

SPEED CAPABILITY DATA

Bearing Number	Grease Capacity NBU15 25%	Grease Capacity NBU15 40%	Kluber Isoflex NBU15 15%	Kluber Isoflex NBU15 20%	Operating Speeds[2] Grease DUL	Operating Speeds[2] Grease DUM	Operating Speeds[2] Grease DUH	(DB Mounting)[1] Oil DUL	(DB Mounting)[1] Oil DUM	(DB Mounting)[1] Oil DUH
	grams	grams	grams	grams	RPM	RPM	RPM	RPM	RPM	RPM
2MM300WI SERIES										
2MM301WI	0.6	1.0	0.40	0.53	35700	28600	19000	60700	48600	32400
2MM302WI	0.7	1.2	0.49	0.65	28600	22900	15200	48600	38900	25900
2MM303WI	1.2	2.0	0.83	1.10	27600	22100	14700	46900	37500	25000
2MM304WI	1.5	2.5	1.03	1.38	24200	19300	12900	41100	32800	21900
2MM305WI	2.3	3.8	1.57	2.09	19700	15700	10500	33400	26700	17800
2MM306WI	3.5	5.6	2.35	3.14	16600	13300	8800	28200	22500	15000
2MM307WI	4.6	7.4	3.07	4.10	14400	11500	7700	24500	19600	13100
2MM308WI	6.4	10.2	4.25	5.66	12700	10100	6800	21500	17200	11500
2MM309WI	8.5	13.6	5.68	7.58	11300	9100	6000	19300	15400	10300
2MM310WI	11.1	17.8	7.40	9.90	10200	8200	5400	17300	13900	9200
2MM311WI	14.2	22.7	9.50	12.60	9300	7400	5000	15800	12600	8400
2MM312WI	17.7	28.3	11.80	15.80	8600	6800	4600	14500	11600	7800
2MM313WI	20.7	33.2	13.80	18.50	7900	6300	4200	13400	10700	7100
2MM314WI	25.2	40.3	16.80	22.40	7400	5900	3900	12500	10000	6700
2MM319WI	60.9	97.4	40.60	54.10	5600	4400	3000	9400	7500	5000
3MM300WI SERIES										
3MM301WI	0.6	1.0	0.40	0.53	32130	25740	17100	54630	43740	29160
3MM302WI	0.7	1.2	0.49	0.65	25740	20610	13680	43740	35010	23310
3MM303WI	1.2	2.0	0.83	1.10	24840	19890	13230	42210	33750	22500
3MM304WI	1.5	2.5	1.03	1.38	21780	17370	11610	36990	29520	19710
3MM305WI	2.3	3.8	1.57	2.09	17730	14130	9450	30060	24030	16020
3MM306WI	3.5	5.6	2.35	3.14	14940	11970	7920	25380	20250	13500
3MM307WI	4.6	7.4	3.07	4.10	12960	10350	6930	22050	17640	11790
3MM308WI	6.4	10.2	4.25	5.66	11430	9090	6120	19350	15480	10350
3MM309WI	8.5	13.6	5.68	7.58	10170	8190	5400	17370	13860	9270
3MM310WI	11.1	17.8	7.40	9.90	9180	7380	4860	15570	12510	8280
3MM311WI	14.2	22.7	9.50	12.60	8370	6660	4500	14220	11340	7560
3MM312WI	17.7	28.3	11.80	15.80	7740	6120	4140	13050	10440	7020
3MM313WI	20.7	33.2	13.80	18.50	7110	5670	3780	12060	9630	6390
3MM314WI	25.2	40.3	16.80	22.40	6660	5310	3510	11250	9000	6030
3MM319WI	60.9	97.4	40.60	54.10	5040	3960	2700	8460	6750	4500

(1) For other mounting arrangement configurations refer to the engineering section on Permissible Speed calculation methods.
(2) For ceramic ball complements use 120% of speeds shown.

MEDIUM
MM300K
(ISO 03) SERIES

DIMENSIONAL SIZES
METRIC / INCH

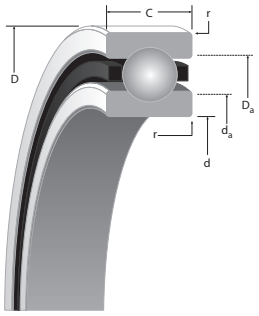

SUPER PRECISION MM:
Running accuracy and performance meet ABEC 9 (ISO P2) levels. Non-critical features conform to ABEC 7 (ISO P4) requirements.

CONRAD CONSTRUCTION:
- Maximum complement of balls seperated by two-piece land piloted cage.

Bearing Number	d Bore	D O.D.	C Width(1)	Ball Qty. x Dia.	Wt.	LOAD RATINGS (steel ball & ceramic ball) C_o (stat)	C_e(dyn)	Limiting Speed (Ng)
METRIC	in./tol: +0; -(µm)			mm	kg	N		RPM
MM305K	25 (5)	62 (7)	17 (130)	7 x 11.9	0.222	12200	26700	26,500
MM306K	30 (5)	72 (7)	19 (130)	7 x 13.5	0.327	15800	34000	22,300
MM307K	35 (6)	80 (7)	21 (130)	7 x 14.3	0.431	18500	37800	19,400
MM308K	40 (6)	90 (8)	23 (130)	8 x 15.9	0.594	22700	46300	17,100
MM309K	45 (6)	100 (8)	25 (130)	8 x 17.5	0.807	31600	59600	15,200
MM310K	50 (6)	110 (8)	27 (130)	8 x 19.1	1.052	37800	69400	13,800
MM311K	55 (7)	120 (8)	29 (150)	8 x 20.6	1.329	44500	81400	12,500
MM312K	60 (7)	130 (9)	31 (150)	8 x 22.2	1.665	51600	92500	11,500
MM313K	65 (7)	140 (9)	33 (150)	8 x 23.8	2.046	59600	105000	10,700
MM314K	70 (7)	150 (9)	35 (150)	8 x 25.4	2.486	68100	115600	9,900
INCH	in./tol: +0; -.000(X)			in.	lbs.	lbs.		RPM
MM305K	0.9843 (2)	2.4409 (3)	0.6693 (47)	7 x 15/32	0.49	2750	6000	26,500
MM306K	1.1811 (2)	2.8346 (3)	0.748 (47)	7 x 17/32	0.72	3550	7650	22,300
MM307K	1.378 (2.5)	3.1496 (3)	0.8268 (47)	7 x 9/16	0.95	4150	8500	19,400
MM308K	1.5748 (2.5)	3.5433 (3)	0.9055 (47)	8 x 5/8	1.31	5100	10400	17,100
MM309K	1.7717 (2.5)	3.937 (3)	0.9843 (47)	8 x 11/16	1.78	7100	13400	15,200
MM310K	1.9685 (2.5)	4.3307 (3)	1.063 (47)	8 x 3/4	2.32	8500	15600	13,800
MM311K	2.1654 (3)	4.7244 (3)	1.1417 (59)	8 x 13/16	2.93	10000	18300	12,500
MM312K	2.3622 (3)	5.1181 (3.5)	1.2205 (59)	8 x 7/8	3.67	11600	20800	11,500
MM313K	2.5591 (3)	5.5118 (3.5)	1.2992 (59)	8 x 15/16	4.51	13400	23600	10,700
MM314K	2.7559 (3)	5.9055 (3.5)	1.378 (59)	8 x 1	5.48	15300	26000	9,900

(Ng) For a single, grease lubricated, spring preloaded bearing. This value to be used in permissible Operating Speed (Sp) calculation.
(1) Width tolerance of preloaded bearing set +0/-0.25 mm (+0/-0.010").
(2) ABMA STD 20 (r_{as} max).

r	Suggested Shoulder Diameters				Shaft Diameter		Mounting Fits		FIXED				FLOATING				
	d_a (Shaft)		D_a (Housing)						Housing Bore (Stationary)		Mounting Fits		Housing Bore (Stationary)		Housing Clearance		
Rad.[2]	Max.	Min.	Max.	Min.	Min.	Max.	Loose	Tight	Min.	Max.	Tight	Loose	Max.	Min.	Max.	Min.	
mm	mm	mm	mm	mm	mm	mm	mm	mm	mm	mm	mm	mm	mm.	mm.	mm.	mm	
1	32.1	31.9	55.8	55.5	24.995	25.000	0.005	0.005	62	62.008	0.000	0.015	62.012	62.007	0.019	0.007	MM305K
1	37.7	37.5	65.2	64.9	29.995	30.000	0.005	0.005	72	72.008	0.000	0.015	72.011	72.007	0.019	0.007	MM306K
1.5	43.7	43.2	72.1	71.6	34.995	35.000	0.005	0.006	80	80.008	0.000	0.015	80.012	80.008	0.020	0.008	MM307K
1.5	49.8	49.3	81.3	80.8	39.995	40.000	0.005	0.006	90	90.008	0.000	0.016	90.015	90.007	0.023	0.007	MM308K
1.5	55.9	55.4	90.2	89.7	44.995	45.000	0.005	0.006	100	100.008	0.000	0.016	100.018	100.010	0.025	0.010	MM309K
1.5	61.2	60.7	99.8	99.3	49.995	50.000	0.005	0.006	110	110.008	0.000	0.016	110.018	110.010	0.025	0.010	MM310K
2	67.3	66.8	108.7	108.2	54.995	55.000	0.005	0.007	120	120.008	0.000	0.016	120.018	120.010	0.025	0.010	MM311K
2	43.2	72.6	117.9	117.3	59.995	60.000	0.005	0.007	130	130.009	0.000	0.018	130.020	130.010	0.029	0.010	MM312K
2	80.3	79.8	126.8	126.2	64.995	65.000	0.005	0.007	140	140.009	0.000	0.018	140.020	140.010	0.029	0.010	MM313K
2	85.3	84.8	135.6	135.1	69.995	70.000	0.005	0.007	150	150.009	0.000	0.018	150.023	150.012	0.032	0.012	MM314K
in.	in.	in.	in.	in.	in.	in.	in.	in.	in.	in.	in.	in.	in.	in.	in.	in.	
0.039	1.27	1.26	2.2	2.19	0.9841	0.9843	0.0002	0.0002	2.4409	2.4412	0.0000	0.0006	2.44140	2.44120	0.00080	0.0003	MM305K
0.039	1.49	1.48	2.57	2.56	1.1809	1.1811	0.0002	0.0002	2.8346	2.8349	0.0000	0.0006	2.83510	2.83490	0.00080	0.0003	MM306K
0.059	1.72	1.7	2.84	2.82	1.3778	1.3780	0.0002	0.00025	3.1496	3.1499	0.0000	0.0006	3.15010	3.14990	0.00080	0.0003	MM308K
0.059	1.96	1.94	3.2	3.18	1.5746	1.5748	0.0002	0.00025	3.5433	3.5436	0.0000	0.0006	3.54390	3.54360	0.00090	0.0003	MM308K
0.059	2.2	2.18	3.55	3.53	1.7715	1.7717	0.0002	0.00025	3.9370	3.9373	0.0000	0.0006	3.93770	3.93740	0.00100	0.0004	MM309K
0.059	2.41	2.39	3.93	3.91	1.9683	1.9685	0.0002	0.00025	4.3307	4.3310	0.0000	0.0006	4.33140	4.33110	0.00100	0.0004	MM310K
0.079	2.65	2.63	4.28	4.26	2.1652	2.1654	0.0002	0.0003	4.7244	4.7247	0.0000	0.0006	4.72510	4.72480	0.00100	0.0004	MM311K
0.079	2.88	2.86	4.64	4.62	2.3620	2.3622	0.0002	0.0003	5.1181	5.1185	0.0000	0.0007	5.11890	5.11850	0.00110	0.0004	MM312K
0.079	3.16	3.14	4.99	4.97	2.5589	2.5591	0.0002	0.0003	5.5118	5.5122	0.0000	0.0007	5.51260	5.51220	0.00110	0.0004	MM313K
0.079	3.36	3.34	5.34	5.32	2.7557	2.7559	0.0002	0.0003	5.9055	5.9059	0.0000	0.0007	5.90640	5.90600	0.00120	0.00050	MM314K

BALL SCREW SUPPORT SERIES

DIMENSIONAL SIZES – METRIC SERIES (METRIC UNITS)

- Designed for maximum axial rigidty, low drag torque, and extreme control of lateral eccentricity.
- Manufactured to ABEC 9 axial tolerances.
- Nonseparable angular-contact type design (60˚ contact angle).
- Manufactured to ABEC 7 radial and envelope tolerances.
- Maximum complement of balls.
- Supplied prelubricated with heavy-duty grease NLGI #2.
- Packaged in DB arrangement [can be mounted in duplexed pairs and in multiplexed sets in either Back-to-Back (DB), Face-to-Face (DF) or Tandem (DT) arrangements].

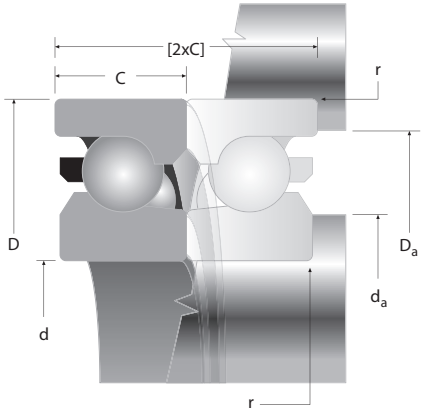

Bearing Number	d Bore	D O.D.	C Width(1)	Wt.	Ball Qty. x Dia.	r Rad.(2)	d_a(Shaft) Max.	d_a(Shaft) Min.	D_a (Housing) Max.	D_a (Housing) Min.	Shaft Dia. Max.	Shaft Dia. Min.	Housing Dia. Max.	Housing Dia. Min.
METRIC	mm/tol: +0; -(µm)			kg	mm	mm	mm	mm	mm	mm	mm	mm	mm	mm
MM12BS32	12 (4)	32 (6)	10 (80)	.04	11 x 4.8	0.8	17.63	17.37	26.63	26.37	11.996	11.992	32.006	32
MM15BS35	15 (4)	35 (6)	11 (80)	.05	13 x 4.8	0.8	20.63	20.37	29.63	29.37	14.996	14.992	35.006	35
MM17BS47	17 (4)	47 (6)	15 (80)	.13	12 x 7.9	0.8	23.13	22.87	41.63	41.37	16.996	16.992	47.006	47
MM20BS47	20 (5)	47 (6)	15 (120)	.12	12 x 7.9	0.8	26.13	25.87	41.63	41.37	19.995	19.99	47.006	47
MM25BS52	25 (5)	52 (7)	15 (120)	.14	13 x 7.9	0.8	31.63	31.37	43.63	43.37	24.995	24.99	52.007	52
MM25BS62	25 (5)	62 (7)	15 (120)	.23	17 x 7.9	0.8	35.13	34.87	56.13	55.87	24.995	24.99	62.007	62
MM30BS62	30 (5)	62 (7)	15 (120)	.21	17 x 7.9	0.8	40.13	39.87	56.13	55.87	29.995	29.99	62.007	62
MM30BS72	30 (5)	72 (7)	15 (120)	.32	18 x 8.7	0.8	40.13	39.87	56.13	55.87	29.995	29.99	72.007	72
MM35BS72	35 (6)	72 (7)	15 (120)	.29	18 x 8.7	0.8	42.13	41.87	64.13	63.87	34.994	34.988	72.007	72
MM35BS100	35 (6)	100 (8)	20 (120)	.86	18 x 12.7	0.8	42.13	41.87	90.13	89.87	39.994	39.988	72.007	72
MM40BS72	40 (6)	72 (7)	15 (120)	.25	18 x 8.7	0.8	47.13	46.87	64.13	63.87	44.994	44.988	75.007	75
MM40BS90	40 (6)	90 (8)	15 (120)	.49	24 x 8.7	0.8	47.13	46.87	82.13	81.87	39.994	39.988	90.008	90
MM40BS90-20	40 (6)	90 (8)	20 (120)	.66	24 x 8.7	0.8	47.13	46.87	82.13	81.87	39.994	39.998	90.008	90
MM40BS90-23	40 (6)	90 (8)	23 (120)	.75	24 x 8.7	0.8	47.13	46.87	82.13	81.87	39.994	39.988	90.008	90
MM40BS100	40 (6)	100 (8)	20 (120)	.82	18 x 12.7	0.8	47.13	46.87	90.13	89.87	39.994	39.988	100.007	100
MM45BS75	45 (6)	75 (7)	15 (120)	.25	20 x 8.7	0.8	52.13	51.87	69.13	68.87	39.994	39.988	72.007	72
MM45BS100	45 (6)	100 (8)	20 (120)	.76	18 x 12.7	0.8	54.13	53.87	90.13	89.87	44.994	44.988	100.008	100
MM50BS90	50 (6)	90 (8)	15 (120)	.41	24 x 8.7	0.8	59.13	58.87	82.13	81.87	49.994	49.988	90.008	90
MM50BS100	50 (6)	100 (8)	20 (120)	.71	18 x 12.7	0.8	59.13	58.87	90.13	89.87	49.994	49.988	100.008	100
MM55BS90	55 (7)	90 (8)	15 (150)	.36	24 x 8.7	0.8	63.13	62.87	82.13	81.87	54.993	54.986	90.008	90
MM55BS120	55 (7)	120 (8)	20 (150)	1.14	21 x 12.7	1	65.13	64.87	110.13	109.87	54.993	54.986	120.008	120
MM60BS120	60 (7)	120 (8)	20 (150)	1.06	21 x 12.7	1	70.13	69.87	110.13	109.87	59.993	59.986	120.008	120
MM75BS110	75 (7)	110 (8)	15 (150)	.46	30 x 8.7	0.8	84.13	83.87	102.13	101.87	74.993	74.986	110.008	110
MM100BS150	100 (8)	150 (9)	20 (200)	1.28	26 x 12.7	1	110.13	109.87	138.13	137.87	99.992	99.984	150.009	150

(1) Width tolerance of preloaded bearing set +0/-0.25 mm (+0/-0.010").

(2) ABMA STD 20 (r_{as} max).

BALL SCREW SUPPORT SERIES

DIMENSIONAL SIZES – METRIC SERIES (INCH UNITS)

- Designed for maximum axial rigidty, low drag torque, and extreme control of lateral eccentricity.
- Manufactured to ABEC 9 axial tolerances.
- Nonseparable angular-contact type design (60˚ contact angle).
- Manufactured to ABEC 7 radial and envelope tolerances.
- Maximum complement of balls.
- Supplied prelubricated with heavy-duty grease NLGI #2.
- Packaged in DB arrangement [can be mounted in duplexed pairs and in multiplexed sets in either Back-to-Back (DB), Face-to-Face (DF) or Tandem (DT) arrangements].

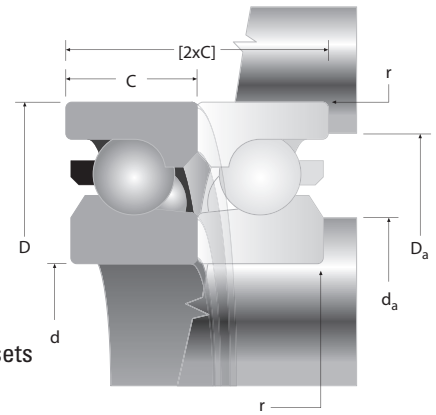

Bearing Number	d Bore	D O.D.	C Width[1]	Wt.[3]	Ball Qty. x Dia.	r Rad.[2]	d_a(Shaft) Max.	d_a(Shaft) Min.	D_a (Housing) Max.	D_a (Housing) Min.	Shaft Dia. Max.	Shaft Dia. Min.	Housing Dia. Max.	Housing Dia. Min.
INCH	mm/tol: +0; -(µm)			lbs.	in.	in.	in.	in.	in.	in.	in.	in.	in.	in.
MM12BS32	0.4724 (1.5)	1.2598 (2.5)	0.3937 (31)	0.09	11 x 3/16	0.031	0.6941	0.6839	1.0484	1.0382	0.4723	0.4721	1.2601	1.2598
MM15BS35	0.5906 (1.5)	1.3780 (2.5)	0.4331 (31)	0.11	13 x 3/16	0.031	0.8122	0.8020	1.1665	1.1563	0.5904	0.5902	1.3782	1.3780
MM17BS47	0.6693 (1.5)	1.8504 (2.5)	0.5906 (31)	0.29	12 x 5/32	0.031	0.9106	0.9004	1.6390	1.6287	0.6691	0.6690	1.8506	1.8504
MM20BS47	0.7874 (2)	1.8504 (2.5)	0.5906 (47)	0.26	12 x 5/32	0.031	1.0287	1.0185	1.6390	1.6287	0.7872	0.7870	1.8506	1.8504
MM25BS52	0.9843 (2)	2.0472 (3)	0.5906 (47)	0.37	13 x 5/32	0.031	1.2453	1.2350	1.7177	1.7075	0.9841	0.9839	2.0475	2.0472
MM25BS62	0.9843 (2)	2.4409 (3)	0.5906 (47)	0.51	17 x 5/32	0.031	1.3831	1.3728	2.2098	2.1996	0.9841	0.9839	2.4412	2.4409
MM30BS62	1.1811 (2)	2.4409 (3)	0.5906 (47)	0.46	17 x 5/32	0.031	1.5799	1.5697	2.2098	2.1996	1.1809	1.1807	2.4412	2.4409
MM30BS72	1.1811 (2)	2.8346 (3)	0.5906 (47)	0.71	18 x 11/32	0.031	1.5799	1.5697	2.2098	2.1996	1.1809	1.1807	2.8349	2.8346
MM35BS72	1.3780 (2.5)	2.8346 (3)	0.5906 (47)	0.64	18 x 11/32	0.031	1.6587	1.6484	2.5248	2.5146	1.3777	1.3775	2.8349	2.8346
MM35BS100	1.3780 (2.5)	3.9370 (3)	0.7874 (47)	1.90	18 x 1/2	0.031	1.6587	1.6484	3.5484	3.5382	1.3777	1.3775	3.9373	3.9370
MM40BS72	1.5748 (2.5)	2.8346 (3)	0.5906 (47)	0.55	18 x 11/32	0.031	1.8555	1.8453	2.5248	2.5146	1.5746	1.5743	2.8349	2.8346
MM40BS90	1.5748 (2.5)	3.5433 (3)	0.5906 (47)	1.08	24 x 11/32	0.031	1.8555	1.8453	3.2335	3.2232	1.5746	1.5743	3.5436	3.5433
MM40BS90-20	1.5748 (2.5)	3.5433 (3)	0.7874 (47)	1.46	24 x 11/32	0.031	1.8555	1.8453	3.2335	3.2232	1.5746	1.5743	3.5436	3.5433
MM40BS90-23	1.5748 (2.5)	3.5433 (3)	0.9055 (47)	1.65	24 x 11/32	0.031	1.8555	1.8453	3.2335	3.2232	1.5746	1.5743	3.5436	3.5433
MM40BS100	1.5748 (2.5)	3.9370 (3)	0.7874 (47)	1.81	18 x 1/2	0.031	1.8555	1.8453	3.5484	3.5382	1.5746	1.5743	3.9373	3.9370
MM45BS75	1.7717 (2.5)	2.9528 (3)	0.5906 (47)	0.55	20 x 11/32	0.031	2.0524	2.0421	2.7217	2.7114	1.7714	1.7712	2.9530	2.9528
MM45BS100	1.7717 (2.5)	3.9370 (3)	0.7874 (47)	1.68	18 x1/2	0.031	2.1311	2.1209	3.5484	3.5382	1.7714	1.7712	3.9373	3.9370
MM50BS90	1.9685 (2.5)	3.5433 (3)	0.5906 (47)	0.90	24 x 11/32	0.031	2.3280	2.3177	3.2335	3.2232	1.9683	1.9680	3.5436	3.5433
MM50BS100	1.9685 (2.5)	3.9370 (3)	0.7874 (47)	1.57	18 x1/2	0.031	2.3280	2.3177	3.5484	3.5382	1.9683	1.9680	3.9373	3.9370
MM55BS90	2.1654 (3)	3.5433 (3)	0.5906 (59)	0.79	24 x 11/32	0.031	2.4854	2.4752	3.2335	3.2232	2.1651	2.1648	3.5436	3.5433
MM55BS120	2.1654 (3)	4.7244 (3)	0.7874 (59)	2.51	21 x 1/2	0.039	2.5642	2.5539	4.3358	4.3256	2.1651	2.1648	4.7247	4.7244
MM60BS120	2.3622 (3)	4.7244 (3)	0.7874 (59)	2.34	21 x 1/2	0.039	2.7610	2.7508	4.3358	4.3256	2.3619	2.3617	4.7247	4.7244
MM75BS110	2.9528 (3)	4.3307 (3)	0.5906 (59)	1.01	30 x 11/32	0.031	3.3122	3.3020	4.0209	4.0106	2.9525	2.9522	4.3310	4.3307
MM100BS150	3.9370 (3)	5.9055 (3.5)	0.7874 (79)	2.82	26 x 1/2	0.039	4.3358	4.3256	5.4382	5.4280	3.9367	3.9364	5.9059	5.9055

[1]Width tolerance of preloaded bearing set +0/-0.25 mm (+0/-0.010").

[2]ABMA STD 20 (r_{as} max).

[3]Single bearing.

BALL SCREW SUPPORT SERIES

DIMENSIONAL SIZES – INCH SERIES

- Designed for maximum axial rigidity, low drag torque, and extreme control of lateral eccentricity.
- Manufactured to ABEC 9 axial tolerances.
- Nonseparable angular-contact type design (60˚ contact angle).
- Manufactured to ABEC 7 radial and envelope tolerances.
- Maximum complement of balls.
- Supplied prelubricated with heavy-duty grease NLGI #2.
- Packaged in DB arrangement [can be mounted in duplexed pairs and in multiplexed sets in either Back-to-Back (DB), Face-to-Face (DF) or Tandem (DT) arrangements].

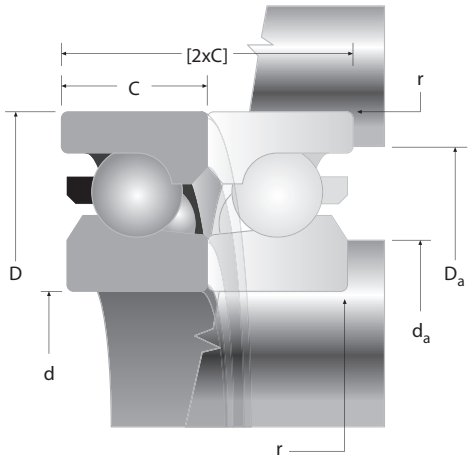

INCHES DIMENSIONAL SIZES - BALL SCREW SUPPORT SERIES

Bearing Number	d Bore	D O.D.	C Width[1]	Wt.[4]	Ball Qty. x Dia.	r Rad.[2]	d_a(Shaft) Max.	d_a(Shaft) Min.	D_a (Housing) Max.	D_a (Housing) Min.	Shaft Dia. Max.	Shaft Dia. Min.	Housing Dia. Max.	Housing Dia. Min.
INCHES	in/tol: +0; -.000(X)			lbs.	in.	in.	in.	in.	in.	in.	in.	in.	in.	in.
MM9306WI2H	0.7874 (2)	1.8504 (2.5)	0.625 (47)	0.28	12 x 5/16	0.031	1.083	1.073	1.641	1.631	0.7872	0.787	1.8507	1.8504
MM9308WI2H	0.9385 (2)	2.4409 (3)	0.625 (47)	0.56	17 x 5/16	0.031	1.321	1.311	2.179	2.169	0.9383	0.9381	2.4412	2.4409
MM9310WI2H	1.5000 (2.5)	2.8346 (3)	0.6250 (47)	0.62	18 x 11/32	0.031	1.865	1.855	2.479	2.469	1.4997	1.4994	2.8349	2.8346
MM9311WI3H	1.7510 (2.5)	3.0000 (3)	0.6250 (47)	0.63	20 x 11/32	0.031	2.057	2.047	2.672	2.662	1.7507	1.7504	3.0003	3.0000
MM9313WI5H	2.2500 (3)	3.5433 (3)	0.6250 (59)	0.80	24 x 11/32	0.031	2.577	2.567	3.196	3.186	2.2497	2.2494	3.5436	3.5433
MM9316WI3H	3.0000 (3)	4.3307 (3)	0.6250 (59)	1.04	30 x 11/32	0.031	3.380	3.370	4.000	3.990	2.9997	2.9994	4.3310	4.3307
MM9321WI3	4.0000 (3)	5.7087 (3.5)	0.8750 (79)	2.60	37 x 3/8	0.039	4.418	4.408	5.301	5.291	3.9997	3.9994	5.7091	5.7087
MM9326WI6H	5.0000 (3)	7.0866 (4)	0.8750 (98)	3.85	35 x 1/2	0.039	5.669	5.659	6.611	6.601	4.9997	4.9994	7.0870	7.0866
MWTRIC	mm/tol:+0; -(mm)			kg	mm	mm	mm	mm	mm	mm	mm	mm	mm	mm
MM9306WI2H	20 (5)	47 (6)	15.88 (120)	0.13	12 x 7.9	0.8	27.508	27.254	41.681	41.427	19.995	19.990	47.008	47.000
MM9308WI2H	23.8 (5)	62.0 (7)	15.88 (120)	0.25	17 x 7.9	0.8	33.553	33.299	55.347	55.093	23.833	23.828	62.006	61.999
MM9310WI2H	38.1 (6)	72 (7)	15.88 (120)	0.28	18 x 8.7	0.8	47.371	47.117	62.967	62.713	38.092	38.085	72.006	71.999
MM9311WI3H	44.5 (6)	76.2 (7)	15.88 (120)	0.29	20 x 8.7	0.8	52.248	51.994	67.869	67.615	44.468	44.460	76.208	76.200
MM9313WI5H	57.2 (7)	90 (7)	15.88 (150)	0.36	24 x 8.7	0.8	65.456	65.202	81.178	80.924	57.142	57.135	90.007	90.000
MM9316WI3H	76.2 (7)	110 (7)	15.88 (150)	0.47	30 x 8.7	0.8	85.852	85.598	101.600	101.346	76.192	76.185	110.007	110.000
MM9321WI3	101.6 (7)	145 (9)	22.23 (200)	1.18	37 x 9.5	1	112.217	111.963	134.645	134.391	101.592	101.585	145.011	145.001
MM9326WI6H	127 (7)	180 (10)	22.23 (250)	1.75	35 x 12.7	1	143.993	143.739	167.919	167.665	126.992	126.985	180.010	180.000

[1] Width tolerance of preloaded bearing set +0/-0.25 mm (+0/-0.010").
[2] Refer to engineering section for width tolerance of preloaded ball screw support bearings.
[3] ABMA Std. 20 (r_{as} max).
[4] Single bearing.

BALL SCREW SUPPORT SERIES

PERFORMANCE DATA METRIC SERIES (METRIC UNITS)

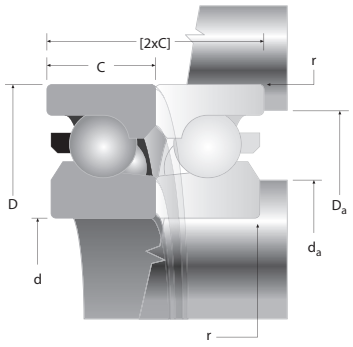

Bearing Number	Static Limiting Thrust Capacity[3] T_L	Dynamic Axial Thrust Load Rating[1][3] C_{ae}	Max. Speed	Axial Spring Constant[3]	Drag Torque (preloaded set)	Preload[2][3] (Heavy)
	N	N	RPM	N/µm	N-m	N
METRIC SERIES - METRIC UNITS - DUH						
MM12BS32DUH	11400	9500	7300	425	0.28	1000
MM15BS35DUH	13700	10400	6400	490	0.30	1200
MM17BS47DUH	24900	24900	4700	750	0.32	3110
MM20BS47DUH	24900	24900	4700	750	0.32	3110
MM25BS52DUH	27100	26000	4300	780	.39	2700
MM25BS62DUH	35600	29800	3300	1050	0.44	4450
MM30BS62DUH	35600	29800	3300	1050	0.44	4450
MM30BS72DUH	45400	36300	2900	1260	0.44	6230
MM35BS72DUH	45400	36300	2900	1260	0.44	6230
MM40BS72DUH	45400	36300	2900	1260	0.44	6230
MM45BS75DUH	50700	38500	2700	1380	0.56	6670
MM40BS90DUH	60900	41400	2200	1660	0.82	8010
MM40BS90-20DUH	60900	41400	2200	1660	.82	8010
MM40BS90-23DUH	60900	41400	2200	1660	.82	8010
MM50BS90DUH	60900	41400	2200	1660	0.82	8010
MM55BS90DUH	60900	41400	2200	1660	0.82	8010
MM35BS100DUH	93400	71200	2000	1750	1.02	12900
MM40BS100DUH	93400	71200	2000	1750	1.02	12900
MM45BS100DUH	93400	71200	2000	1750	1.02	12900
MM50BS100DUH	93400	71200	2000	1750	1.02	12900
MM75BS110DUH	77000	44500	1700	2080	1.00	9790
MM55BS120DUH	133400	75600	1700	2150	1.36	15570
MM60BS120DUH	133400	75600	1700	2150	1.36	15570
MM100BS150DUH	115600	57400	1300	3400	2.18	21350
METRIC SERIES - METRIC UNITS - QUH						
MM12BS32QUH	22800	15400	5100	850	0.56	2000
MM15BS35QUH	27400	16850	4500	980	0.60	2400
MM17BS47QUH	49800	40500	3300	1510	0.64	6230
MM20BS47QUH	49800	40500	3300	1510	0.64	6230
MM25BS52QUH	54300	42300	3000	1560	0.49	5400
MM25BS62QUH	71200	48500	2300	2100	0.88	8900
MM30BS62QUH	71200	48500	2300	2100	0.88	8900
MM30BS72QUH	90700	58700	2000	2520	0.88	12450
MM35BS72QUH	90700	58700	2000	2520	0.88	12450
MM40BS72QUH	90700	58700	2000	2520	0.88	12450
MM45BS75QUH	101400	62700	1900	2770	1.12	13340
MM40BS90QUH	121900	67200	1500	3330	1.64	16010
MM50BS90QUH	121900	67200	1500	3330	1.64	16010
MM55BS90QUH	121900	67200	1500	3330	1.64	16010
MM35BS100QUH	186800	115600	1400	3500	2.04	25800
MM40BS100QUH	186800	115600	1400	3500	2.04	25800
MM45BS100QUH	186800	115600	1400	3500	2.04	25800
MM50BS100QUH	186800	115600	1400	3500	2.04	25800
MM75BS110QUH	153900	72100	1200	4170	2.00	19570
MM55BS120QUH	266900	122800	1200	4310	2.72	31140
MM60BS120QUH	266900	122800	1200	4310	2.72	31140
MM100BS150QUH	231300	93400	900	6790	4.36	42700

(1) Based on 1500 hours L_{10} life and permissable speed.
(2) Heavy preload is standard.
(3) Data presented is for a single bearing in a DUH set and for two bearings in a QUH set mounted DB or DF.

BALL SCREW SUPPORT SERIES

PERFORMANCE DATA METRIC SERIES (INCH UNITS)

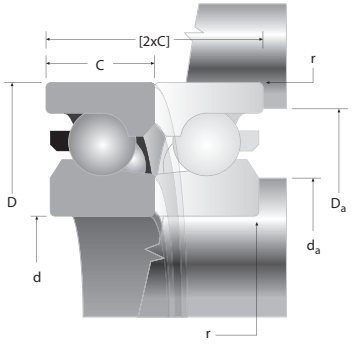

Bearing Number	Static Limiting Thrust Capacity[3] T_L	Dynamic Axial Thrust Load Rating[1][3] C_{ae}	Max. Speed	Axial Spring Constant[3]	Drag Torque (preloaded set)	Preload[2][3] (Heavy)
	lbs.	lbs.	RPM	10^6 lbs./in.	in.-lbs.	lbs.
METRIC SERIES - INCH UNITS - DUH						
MM12BS32DUH	2600	2140	7300	2.4	2.48	200
MM15BS35DUH	3100	2340	6400	2.8	2.65	300
MM17BS47DUH	5600	5600	4700	4.3	2.83	700
MM20BS47DUH	5600	5600	4700	4.3	2.83	700
MM25BS52DUH	6100	5850	4300	4.5	3.45	600
MM25BS62DUH	8000	6700	3300	6	3.88	1000
MM30BS62DUH	8000	6700	3300	6	3.88	1000
MM30BS72DUH	10200	8160	2900	7.2	3.88	1400
MM35BS72DUH	10200	8160	2900	7.2	3.88	1400
MM40BS72DUH	10200	8160	2900	7.2	3.88	1400
MM45BS75DUH	11400	8660	2700	7.9	4.96	1500
MM40BS90DUH	13700	9310	2200	9.5	7.26	1800
MM40BS90DUH-20	13700	9310	2200	9.5	7.26	1800
MM40BS90DUH-23	13700	9310	2200	9.5	7.26	1800
MM50BS90DUH	13700	9310	2200	9.5	7.26	1800
MM55BS90DUH	13700	9310	2200	9.5	7.26	1800
MM35BS100DUH	21000	16010	2000	10	9.03	2900
MM40BS100DUH	21000	16010	2000	10	9.03	2900
MM45BS100DUH	21000	16010	2000	10	9.03	2900
MM50BS100DUH	21000	16010	2000	10	9.03	2900
MM75BS110DUH	17300	10000	1700	11.9	8.85	2200
MM55BS120DUH	30000	17000	1700	12.3	12.04	3500
MM60BS120DUH	30000	17000	1700	12.3	12.04	3500
MM100BS150DUH	26000	12900	1300	19.4	19.29	4800
METRIC SERIES - INCH UNITS - QUH						
MM12BS32QUH	5100	3500	5100	4.9	4.96	400
MM15BS35QUH	6200	3800	4500	5.6	5.31	500
MM17BS47QUH	11200	9100	3300	8.6	5.65	1400
MM20BS47QUH	11200	9100	3300	8.6	5.65	1400
MM25BS52QUH	12200	9500	3000	8.9	6.90	1200
MM25BS62QUH	16000	10900	2300	12	7.78	2000
MM30BS62QUH	16000	10900	2300	12	7.78	2000
MM30BS72QUH	20400	13200	2000	14.4	7.78	2800
MM35BS72QUH	20400	13200	2000	14.4	7.78	2800
MM40BS72QUH	20400	13200	2000	14.4	7.78	2800
MM45BS75QUH	22800	14100	1900	15.8	9.92	3000
MM40BS90QUH	27400	15100	1500	19	14.51	3600
MM50BS90QUH	27400	15100	1500	19	14.51	3600
MM55BS90QUH	27400	15100	1500	19	14.51	3600
MM35BS100QUH	42000	26000	1400	20	18.05	5800
MM40BS100QUH	42000	26000	1400	20	18.05	5800
MM45BS100QUH	42000	26000	1400	20	18.05	5800
MM50BS100QUH	42000	26000	1400	20	18.05	5800
MM75BS110QUH	34600	16200	1200	23.8	17.70	4400
MM55BS120QUH	60000	27600	1200	24.6	24.08	7000
MM60BS120QUH	60000	27600	1200	24.6	24.08	7000
MM100BS150QUH	52000	21000	900	38.8	38.59	9600

(1) Based on 1500 hours L_{10} life and permissable speed.
(2) Heavy preload is standard.
(3) Data presented is for a single bearing in a DUH set and for two bearings in a QUH set mounted DB or DF.

BALL SCREW SUPPORT SERIES

PERFORMANCE DATA INCH SERIES (INCH UNITS)

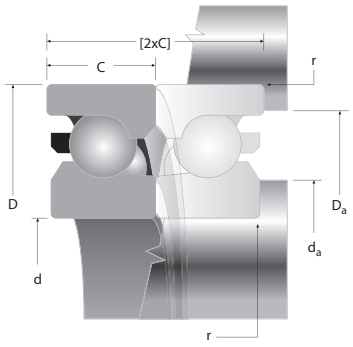

Bearing Number	Static Limiting Thrust Capacity(3) T_L	Dynamic Axial Thrust Load Rating(1)(3) C_{ae}	Max. Speed	Axial Spring Constant(3)	Drag Torque (preloaded set)	Preload(2)(3) (Heavy)
	lbs.	lbs.	RPM	10^6 lbs./in.	in.-lbs.	lbs.
INCH SERIES - INCH UNITS - DUH / QUH						
MM9306WI2HDUH	5600	5600	4700	4.30	2.83	700
MM9308WI2HDUH	8000	6700	3300	6.00	3.89	1000
MM9310WI2HDUH	10200	8150	2900	7.20	3.89	1400
MM9311WI3HDUH	11400	8650	2700	7.90	4.96	1500
MM9313WI5HDUH	13700	9300	2200	9.50	7.26	1800
MM9316WI3HDUH	17300	10000	1700	11.90	8.85	2200
MM9321WI3DUH	26000	12900	1300	19.40	9.01	4800
MM9326WI6HDUH	42000	21200	1000	20.70	11.1	6000
MM9306WI2HQUH	11200	9100	3300	8.60	5.66	1400
MM9308WI2HQUH	16000	10900	2300	12.00	7.78	2000
MM9310WI2HQUH	20400	13200	2000	14.40	7.78	2800
MM9311WI3HQUH	22800	14100	1900	15.80	9.92	3000
MM9313WI5HQUH	27400	15100	1500	19.00	14.52	3600
MM9316WI3HQUH	34600	16200	1200	23.80	17.7	4400
MM9321WI3QUH	52000	21000	900	38.80	18.02	9600
MM9326WI6HQUH	84000	34400	700	41.40	22.22	12000
	N	N	RPM	N/µm	N-m	N
INCH SERIES - METRIC UNITS - DUH / QUH						
MM9306WI2HDUH	24900	24900	4700	750	0.32	3110
MM9308WI2HDUH	35600	29800	3300	1050	0.44	4450
MM9310WI2HDUH	45400	36300	2900	1260	0.44	6230
MM9311WI3HDUH	50700	38500	2700	1380	0.56	6670
MM9313WI5HDUH	60900	41400	2200	1660	0.82	8010
MM9316WI3HDUH	77000	44500	1700	2080	1	9790
MM9321WI3DUH	115700	57400	1300	3400	1.02	21350
MM9326WI6HDUH	186800	94300	1000	3630	1.26	26690
MM9306WI2HQUH	49800	40500	3300	1510	0.64	6230
MM9308WI2HQUH	71200	48500	2300	2100	0.88	8900
MM9310WI2HQUH	90700	58700	2000	2520	0.88	12450
MM9311WI3HQUH	101400	62700	1900	2770	1.12	13340
MM9313WI5HQUH	121900	67200	1500	3330	1.64	16010
MM9316WI3HQUH	153900	72100	1200	4170	2	19570
MM9321WI3QUH	231300	93400	900	6800	2.04	42700
MM9326WI6HQUH	373600	153000	700	7250	2.51	53380

(1) Based on 1500 hours L_{10} life and permissable speed.
(2) Heavy preload is standard.
(3) Data presented is for a single bearing in a DUH set and for two bearings in a QUH set mounted DB or DF.

BSBU D

STANDARD AND HEAVY-DUTY BEARINGS

- Designed and developed to give the machine manufacturer a ready-made unit providing excellent stiffness and accuracy in ball screw applications.
- Units combine the features of MM-BS-DU (Duplex) ball screw bearings with an accurately manufactured housing and laminar ring seals.
- Each unit is prepacked with a measured quantity of high quality bearing grease and requires no further lubrication.
- Units are supplied with the bearings in pairs mounted in the "DB" ("O") arrangement.
- Other bearing arrangements can be accommodated if required. Please consult your Timken representative with details of your requirements or for suggested shaft and housing fits.

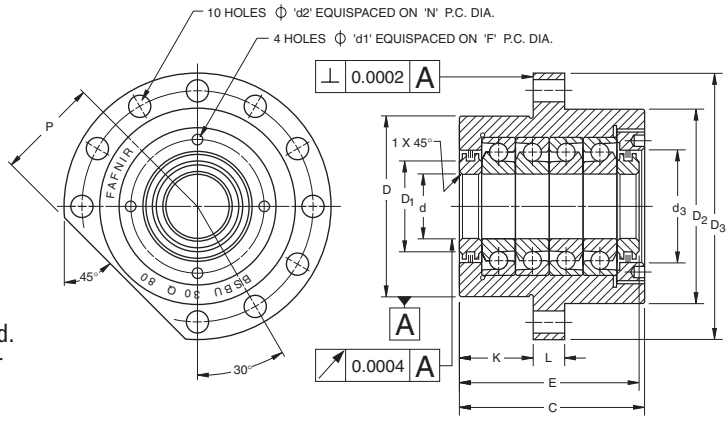

STANDARD SERIES – DIMENSIONAL TOLERANCES ± .13 mm (± 0.005") UNLESS OTHERWISE STATED.

Shaft Dia.	Unit Number	C	d	d_1	d_2	d_3	D	D_1	D_2	D_3	E	F	K	L	N	P	Wt.
mm	(Bearing Set)	mm in.	mm in.	mm in.	mm in.	mm in.	mm in.	mm in.	mm in.	mm in.	mm in.	mm in.	mm in.	mm in.	mm in.	mm in.	kg lbs.
17	**BSBU17D60**	**47.0**	**17.000 16.996**	**4.3**	**6.6**	**36.0**	**60.000 59.987**	**26.0**	**64.0**	**90.0**	**44.26 43.24**	**42.5**	**32.0**	**13.0**	**76.0**	**32**	**1.1**
	(MM17BS47DUH)	1.85	0.6693 0.6691	0.17	0.26	1.42	2.3622 2.3617	1.02	2.52	3.54	1.742 1.702	1.67	1.26	0.51	2.99	1.26	2.42
20	**BSBU20D60**	**47.0**	**20.000 19.996**	**4.3**	**6.6**	**36.0**	**60.000 59.987**	**26.0**	**64.0**	**90.0**	**44.26 43.24**	**42.5**	**32.0**	**13.0**	**76.0**	**32**	**1.1**
	(MM20BS47DUH)	1.85	0.7874 0.7872	0.17	0.26	1.42	2.3622 2.3617	1.02	2.52	3.54	1.742 1.702	1.67	1.26	0.51	2.99	1.26	2.42
25	**BSBU25D80**	**52.0**	**25.000 24.996**	**4.3**	**9.2**	**50.0**	**80.000 79.987**	**40.0**	**88.0**	**120.0**	**50.26 49.24**	**59.5**	**32.0**	**15.0**	**102.0**	**44**	**2.3**
	(MM25BS62DUH)	2.05	0.9842 0.9841	0.17	0.36	1.97	3.1496 3.1491	1.57	3.46	4.72	1.979 1.938	2.34	1.26	0.59	4.02	1.73	5.06
30	**BSBU30D80**	**52.0**	**30.000 29.996**	**4.3**	**9.2**	**50.0**	**80.000 79.987**	**40.0**	**88.0**	**120.0**	**50.26 49.24**	**59.5**	**32.0**	**15.0**	**102.0**	**44**	**2.2**
	(MM30BS62DUH)	2.05	1.1811 1.1809	0.17	0.36	1.97	3.1496 3.1491	1.57	3.46	4.72	1.979 1.938	2.34	1.26	0.59	4.02	1.73	4.84
35	**BSBU35D90**	**52.0**	**35.000 34.995**	**4.3**	**9.2**	**60.0**	**90.000 89.985**	**46.0**	**98.0**	**130.0**	**50.26 49.24**	**66.5**	**32.0**	**15.0**	**113.0**	**49**	**3.2**
	(MM35BS72DUH)	2.05	1.378 1.3778	0.17	0.36	2.36	3.5433 3.5427	1.81	3.86	5.12	1.979 1.938	2.62	1.26	0.59	4.45	1.93	7.04
40	**BSBU40D90**	**52.0**	**40.000 39.995**	**4.3**	**9.2**	**60.0**	**90.000 89.985**	**46.0**	**98.0**	**130.0**	**50.26 49.24**	**66.5**	**32.0**	**15.0**	**113.0**	**49**	**3.1**
	(MM40BS72DUH)	2.05	1.5748 1.5746	0.17	0.36	2.36	3.5433 3.5427	1.81	3.86	5.12	1.979 1.938	2.62	1.26	0.59	4.45	1.93	6.82
HEAVY-DUTY SERIES																	
35	**BSBU35D124**	**66.0**	**35.000 34.995**	**5.3**	**11.4**	**76.0**	**124.000 123.982**	**66.0**	**128.0**	**165.0**	**64.26 63.24**	**90.0**	**43.5**	**17.0**	**146.0**	**64**	**6.3**
	(MM35BS100DUH)	2.60	1.3780 1.3778	0.21	0.45	2.99	4.8819 4.8812	2.6	5.04	6.50	2.530 2.490	3.54	1.71	0.67	5.75	2.52	13.86
40	**BSBU40D124**	**66.0**	**40.000 39.995**	**5.3**	**11.4**	**76.0**	**124.000 123.982**	**66.0**	**128.0**	**165.0**	**64.26 63.24**	**90.0**	**43.5**	**17.0**	**146.0**	**64**	**6.1**
	(MM40BS100DUH)	2.60	1.5748 1.5746	0.21	0.45	2.99	4.8819 4.8812	2.6	5.04	6.50	2.530 2.490	3.54	1.71	0.67	5.75	2.52	13.42
45	**BSBU45D124**	**66.0**	**45.000 44.995**	**5.3**	**11.4**	**76.0**	**124.000 123.982**	**66.0**	**128.0**	**165.0**	**64.26 63.24**	**90.0**	**43.5**	**17.0**	**146.0**	**64**	**6.0**
	(MM45BS100DUH)	2.60	1.7716 1.7714	0.21	0.45	2.99	4.8819 4.8812	2.6	5.04	6.50	2.530 2.490	3.54	1.71	0.67	5.75	2.52	13.2
50	**BSBU50D124**	**66.0**	**50.000 49.995**	**5.3**	**11.4**	**76.0**	**124.000 123.982**	**66.0**	**128.0**	**165.0**	**64.26 63.24**	**90.0**	**43.5**	**17.0**	**146.0**	**64**	**5.9**
	(MM50BS100DUH)	2.60	1.9685 1.9683	0.21	0.45	2.99	4.8819 4.8812	2.6	5.04	6.50	2.530 2.490	3.54	1.71	0.67	5.75	2.52	12.898

BSBU Q

STANDARD AND HEAVY-DUTY BEARINGS

- Similar in design and features to the series BSBU D except MM-BS-QU Quadruplex bearings are used.
- Units are supplied with the bearings in quad sets mounted in the "DB" ("O") arrangement.
- Consult your Timken representative for suggested shaft.

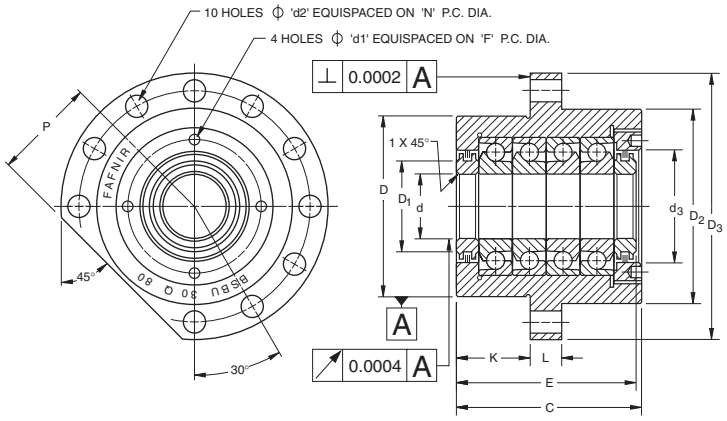

STANDARD SERIES – DIMENSIONAL TOLERANCES ± 0.005" ± .13 mm (± 0.005") UNLESS OTHERWISE STATED.

Shaft Dia.	Unit Number	C	d	d_1	d_2	d_3	D	D_1	D_2	D_3	E	F	K	L	N	P	Wt.
mm	(Bearing Set)	mm in.	mm in.	mm in.	mm in.	mm in.	mm in.	mm in.	mm in.	mm in.	mm in.	mm in.	mm in.	mm in.	mm in.	mm in.	kg lbs.
17	**BSBU17Q60**	**77.0**	**17.000 16.996**	**4.3**	**6.6**	**36.0**	**60.000 59.987**	**26.0**	**64.0**	**90.0**	**74.26 72.74**	**42.5**	**32.0**	**13.0**	**76.0**	**32.0**	**1.7**
	(MM17BS47QUH)	3.03	0.6693 0.6690	0.17	0.26	1.42	2.3622 2.3617	1.02	2.52	3.54	2.924 2.864	1.67	1.26	0.51	2.99	1.26	3.74
20	**BSBU20Q60**	**77.0**	**20.000 19.996**	**4.3**	**6.6**	**36.0**	**60.000 59.987**	**26.0**	**64.0**	**90.0**	**74.26 72.74**	**42.5**	**32.0**	**13.0**	**76.0**	**32.0**	**1.7**
	(MM20BS47QUH)	3.03	0.7874 0.7872	0.17	0.26	1.42	2.3622 2.3617	1.02	2.52	3.54	2.924 2.864	1.67	1.26	0.51	2.99	1.26	3.74
25	**BSBU25Q80**	**82.0**	**25.000 24.996**	**4.3**	**9.2**	**50.0**	**80.000 79.987**	**40.0**	**88.0**	**120.0**	**80.26 78.74**	**59.5**	**32.0**	**15.0**	**102.0**	**44.0**	**3.5**
	(MM25BS62QUH)	3.23	0.9842 0.9841	0.17	0.36	1.97	3.1496 3.1491	1.57	3.46	4.72	3.160 3.100	2.34	1.26	0.59	4.02	1.73	7.7
30	**BSBU30Q80**	**82.0**	**30.000 29.996**	**4.3**	**9.2**	**50.0**	**80.000 79.987**	**40.0**	**88.0**	**120.0**	**80.26 78.74**	**59.5**	**32.0**	**15.0**	**102.0**	**44.0**	**3.4**
	(MM30BS62QUH)	3.23	1.1811 1.1809	0.17	0.36	1.97	3.1496 3.1491	1.57	3.46	4.72	3.160 3.100	2.34	1.26	0.59	4.02	1.73	7.48
35	**BSBU35Q90**	**82.0**	**35.000 34.995**	**4.3**	**9.2**	**60.0**	**90.000 89.985**	**46.0**	**98.0**	**130.0**	**80.26 78.74**	**66.5**	**32.0**	**15.0**	**113.0**	**49.0**	**4.6**
	(MM35BS72QUH	3.23	1.3780 1.3778	0.17	0.36	2.36	3.5433 3.5427	1.81	3.86	5.12	3.160 3.100	2.62	1.26	0.59	4.45	1.93	10.12
40	**BSBU40Q90**	**82.0**	**40.000 39.995**	**4.3**	**9.2**	**60.0**	**90.000 89.985**	**46.0**	**98.0**	**130.0**	**80.26 78.74**	**66.5**	**32.0**	**15.0**	**113.0**	**49.0**	**4.5**
	(MM40BS72QUH)	3.23	1.5748 1.5746	0.17	0.36	2.36	3.5433 3.5427	1.81	3.86	5.12	3.160 3.100	2.62	1.26	0.59	4.45	1.93	9.9
HEAVY-DUTY SERIES																	
35	**BSBU35Q124**	**106.0**	**35.000 34.995**	**5.3**	**11.4**	**76.0**	**124.000 123.982**	**66.0**	**128.0**	**165.0**	**104.26 102.74**	**90.0**	**43.5**	**17.0**	**146.0**	**64.0**	**10.1**
	(MM35BS100QUH)	4.17	1.3780 1.3778	0.21	0.45	2.99	4.8819 4.8812	2.6	5.04	6.5	4.105 4.045	3.54	1.71	0.67	5.75	2.52	22.22
40	**BSBU40Q124**	**106.0**	**40.000 39.995**	**5.3**	**11.4**	**76.0**	**124.000 123.982**	**66.0**	**128.0**	**165.0**	**104.26 102.74**	**90.0**	**43.5**	**17.0**	**146.0**	**64.0**	**9.7**
	(MM40BS100QUH)	4.17	1.5748 1.5746	0.21	0.45	2.99	4.8819 4.8812	2.6	5.04	6.5	4.105 4.045	3.54	1.71	0.67	5.75	2.52	21.34
45	**BSBU45Q124**	**106.0**	**45.000 44.995**	**5.3**	**11.4**	**76.0**	**124.000 123.982**	**66.0**	**128.0**	**165.0**	**104.26 102.74**	**90.0**	**43.5**	**17.0**	**146.0**	**64.0**	**9.5**
	(MM45BS100QUH)	4.17	1.7716 1.7714	0.21	0.45	2.99	4.8819 4.8812	2.6	5.04	6.5	4.105 4.045	3.54	1.71	0.67	5.75	2.52	20.9
50	**BSBU50Q124**	**106.0**	**50.000 49.995**	**5.3**	**11.4**	**76.0**	**124.000 123.982**	**66.0**	**128.0**	**165.0**	**104.26 102.74**	**90.0**	**43.5**	**17.0**	**146.0**	**64.0**	**9.3**
	(MM50BS100QUH)	4.17	1.9685 1.9683	0.21	0.45	2.99	4.8819 4.8812	2.6	5.04	6.5	4.105 4.045	3.54	1.71	0.67	5.75	2.52	20.46

BSPB D

STANDARD AND HEAVY-DUTY BEARINGS

- Design of bearing pillow block unit for ball screw applications.
- Incorporates similar features to the series BSBU D but is designed to bolt down onto a flat surface, parallel to the ball screw axis.
- In the standard unit, pilot holes for dowels are provided.
- Units with finished holes for dowels can be supplied by special order if required.
- Consult your Timken representative for suggested shaft.

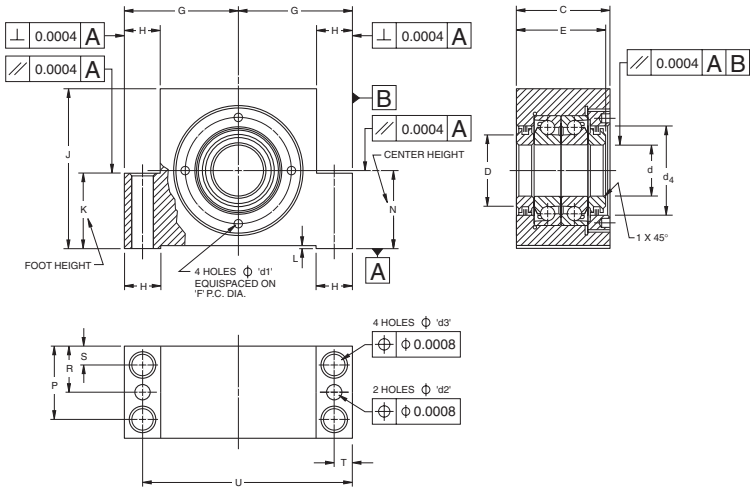

STANDARD SERIES – DIMENSIONAL TOLERANCES ± .13 mm (± 0.005") UNLESS OTHERWISE STATED.

Shaft Dia.	Unit Number	C	d	d_1	d_2	d_3	d_4	D	E	F	G	H	J	K	L	N	P	R	S	T	U	Wt.
mm	(Bearing Set)	mm in.	mm in.	mm in.	mm in.	mm in.	mm in.	mm in.	mm in.	mm in.	mm in.	mm in.	mm in.	mm in.	mm in.	mm in.	mm in.	mm in.	mm in.	mm in.	mm in.	kg lbs.
17	**BSPB17D32**	**47.000 46.950**	**17.000 16.996**	**4.3**	**7.8**	**9.0**	**36.0**	**26.0**	**44.26 43.24**	**42.5**	**47.000 46.987**	**17**	**62**	**32.0**	**1.0**	**32.000 31.987**	**38.0**	**22.0**	**9.0**	**8.5**	**85.5**	**1.5**
	(MM17BS47DUH)	1.850 1.848	0.6693 0.6691	0.17	0.31	0.35	1.42	1.02	1.742 1.702	1.67	1.8504 1.8499	0.67	2.44	1.26	0.04	1.2598 1.2593	1.50	0.87	0.35	0.33	3.37	3.3
20	**BSPB20D32**	**47.000 46.950**	**20.000 19.996**	**4.3**	**7.8**	**9.0**	**36.0**	**26.0**	**44.26 43.24**	**42.5**	**47.000 46.987**	**17**	**62**	**32.0**	**1.0**	**32.000 31.987**	**38.0**	**22.0**	**9.0**	**8.5**	**85.5**	**1.5**
	(MM20BS47DUH)	1.850 1.848	0.7874 0.7872	0.17	0.31	0.35	1.42	1.02	1.742 1.702	1.67	1.8504 1.8499	0.67	2.44	1.26	0.04	1.2598 1.2593	1.50	0.87	0.35	0.33	3.37	3.3
25	**BSPB25D42**	**52.000 51.950**	**25.000 24.996**	**4.3**	**9.8**	**11.0**	**50.0**	**40.0**	**50.26 49.24**	**59.5**	**62.500 62.487**	**20**	**85**	**42.0**	**1.0**	**42.000 41.987**	**42.0**	**25.0**	**10.0**	**10.0**	**115.0**	**2.8**
	(MM25BS62DUH)	2.047 2.045	0.9842 0.9841	0.17	0.39	0.43	1.97	1.57	1.979 1.938	2.34	2.4606 2.4601	0.79	3.35	1.65	0.04	1.6535 1.6530	1.65	0.98	0.39	0.39	4.53	6.16
30	**BSPB30D42**	**52.000 51.920**	**30.000 29.996**	**4.3**	**9.8**	**11.0**	**50.0**	**40.0**	**50.26 49.24**	**59.5**	**62.500 62.487**	**20**	**85**	**42.0**	**1.0**	**42.000 41.987**	**42.0**	**25.0**	**10.0**	**10.0**	**115.0**	**2.7**
	(MM30BS62DUH)	2.047 2.045	1.1811 1.1809	0.17	0.39	0.43	1.97	1.57	1.979 1.938	2.34	2.4606 2.4601	0.79	3.35	1.65	0.04	1.6535 1.6530	1.65	0.98	0.39	0.39	4.53	5.94
35	**BSPB35D50**	**52.000 51.950**	**35.000 34.995**	**4.3**	**13.0**	**13.0**	**60.0**	**46.0**	**50.26 49.24**	**66.5**	**68.000 67.987**	**20.5**	**95**	**50**	**1.0**	**50.000 49.987**	**42.0**	**25.0**	**10.0**	**10.0**	**126.0**	**3.8**
	(MM35BS72DUH)	2.047 2.045	1.3780 1.3778	0.17	0.51	0.51	2.36	1.81	1.979 1.938	2.62	2.6772 2.6767	0.81	3.74	1.97	0.04	1.9685 1.9680	1.65	0.98	0.39	0.39	4.96	8.36
40	**BSPB40D50**	**52.000 51.950**	**40.000 39.995**	**4.3**	**13.0**	**13.0**	**60.0**	**46.0**	**50.26 49.24**	**66.5**	**68.000 67.987**	**20.5**	**95**	**50.0**	**1.0**	**50.000 49.987**	**42.0**	**25.0**	**10.0**	**10.0**	**126.0**	**3.7**
	(MM40BS72DUH)	2.047 2.045	1.5748 1.5746	0.17	0.51	0.51	2.36	1.81	1.979 1.938	2.62	2.6772 2.6767	0.81	3.74	1.97	0.04	1.9685 1.9680	1.65	0.98	0.39	0.39	4.96	8.14
HEAVY-DUTY SERIES																						
35	**BSPB35D65**	**66.000 65.950**	**35.000 34.995**	**5.3**	**11.8**	**18.0**	**76.0**	**66.0**	**64.26 63.24**	**90.0**	**95.000 94.987**	**30.0**	**130.0**	**65.0**	**1.0**	**65.000 64.987**	**53.0**	**32.0**	**13.0**	**15.0**	**175.0**	**9.7**
	(MM35BS100DUH)	2.598 2.596	1.3780 1.3778	0.21	0.46	0.71	2.99	2.6	2.530 2.490	3.54	3.7402 3.7396	1.18	5.12	2.56	0.04	2.5590 2.5585	2.09	1.26	0.51	0.59	6.89	21.34
40	**BSPB40D65**	**66.000 65.950**	**40.000 39.995**	**5.3**	**11.8**	**18.0**	**76.0**	**66.0**	**64.26 63.24**	**90.0**	**95.000 94.987**	**30.0**	**130.0**	**65.0**	**1.0**	**65.000 64.987**	**53.0**	**32.0**	**13.0**	**15.0**	**175.0**	**9.5**
	(MM40BS100DUH)	2.598 2.596	1.5748 1.5746	0.21	0.46	0.71	2.99	2.6	2.530 2.490	3.54	3.7402 3.7396	1.18	5.12	2.56	0.04	2.5590 2.5585	2.09	1.26	0.51	0.59	6.89	20.9
45	**BSPB45D65**	**66.000 65.950**	**45.000 44.995**	**5.3**	**11.8**	**18.0**	**76.0**	**66.0**	**64.26 63.24**	**90.0**	**95.000 94.987**	**30.0**	**130.0**	**65.0**	**1.0**	**65.000 64.987**	**53.0**	**32.0**	**13.0**	**15.0**	**175.0**	**9.3**
	(MM45BS100DUH)	2.598 2.596	1.7716 1.7714	0.21	0.46	0.71	2.99	2.6	2.530 2.490	3.54	3.7402 3.7396	1.18	5.12	2.56	0.04	2.5590 2.5585	2.09	1.26	0.51	0.59	6.89	20.46
50	**BSPB50D65**	**66.000 65.950**	**50.000 49.995**	**5.3**	**11.8**	**18.0**	**76.0**	**66.0**	**64.26 63.24**	**90.0**	**95.000 94.987**	**30.0**	**130.0**	**65.0**	**1.0**	**65.000 64.987**	**53.0**	**32.0**	**13.0**	**15.0**	**175.0**	**9.1**
	(MM50BS100DUH)	2.598 2.596	1.9685 1.9683	0.21	0.46	0.71	2.99	2.6	2.530 2.490	3.54	3.7402 3.7396	1.18	5.12	2.56	0.04	2.5590 2.5585	2.09	1.26	0.51	0.59	6.89	20.02

BSPB Q
BALL SCREW SUPPORT
BEARING PILLOW BLOCK UNITS

- Similar in design and features to the Series BSPB D, except MM-BS-QU quadroplex bearings are used.
- Units are supplied with the bearings in quad sets mounted in the "DB" ("O") arrangement.
- Consult your Timken representative for suggested shaft fits.

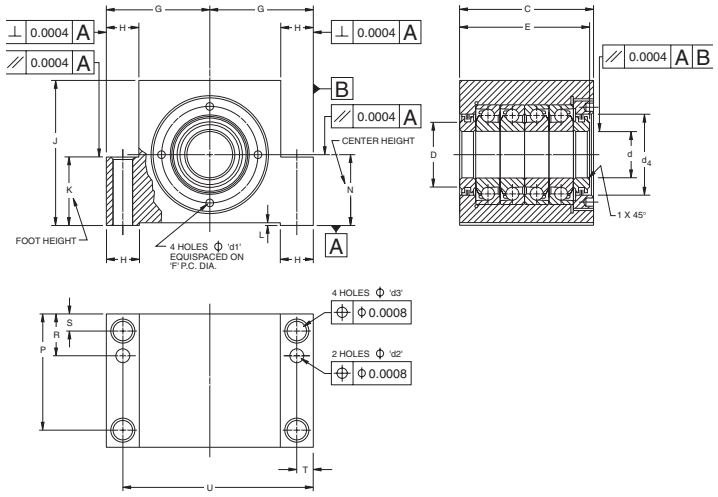

STANDARD SERIES – DIMENSIONAL TOLERANCES ± .13 mm (± 0.005") UNLESS OTHERWISE STATED.

Shaft Dia.	Unit Number	C	d	d_1	d_2	d_3	d_4	D	E	F	G	H	J	K	L	N	P	R	S	T	U	Wt.
mm	(Bearing Set)	mm in.	mm in.	mm in.	mm in.	mm in.	mm in.	mm in.	mm in.	mm in.	mm in.	mm in.	mm in.	mm in.	mm in.	mm in.	mm in.	mm in.	mm in.	mm in.	mm in.	kg lbs.
17	**BSPB17Q32**	**77.00 76.95**	**17.000 16.996**	**4.3**	**7.8**	**9.0**	**36.0**	**26.0**	**74.26 72.74**	**42.5**	**47.000 46.987**	**17**	**62**	**32.0**	**1.0**	**32.000 31.987**	**38.0**	**22.0**	**9.0**	**8.5**	**85.5**	**1.5**
	(MM17BS47QUH)	3.031 3.03	0.6693 0.6691	0.17	0.31	0.35	1.42	1.02	2.924 2.864	1.67	1.8504 1.8499	0.67	2.44	1.26	0.04	1.2598 1.2593	1.50	0.87	0.35	0.33	3.37	3.3
20	**BSPB20Q32**	**77.00 76.95**	**20.000 19.996**	**4.3**	**7.8**	**9.0**	**36.0**	**26.0**	**74.26 72.74**	**42.5**	**47.000 46.987**	**17**	**62**	**32.0**	**1.0**	**32.000 31.987**	**38.0**	**22.0**	**9.0**	**8.5**	**85.5**	**1.5**
	(MM20BS47QUH)	3.031 3.03	0.7874 0.7872	0.17	0.31	0.35	1.42	1.02	2.924 2.864	1.67	1.8504 1.8499	0.67	2.44	1.26	0.04	1.2598 1.2593	1.50	0.87	0.35	0.33	3.37	3.3
25	**BSPB25Q42**	**82.00 81.95**	**25.000 24.996**	**4.3**	**9.8**	**11.0**	**50.0**	**40.0**	**80.26 78.74**	**59.5**	**62.500 62.487**	**20**	**85**	**42.0**	**1.0**	**42.000 41.987**	**42.0**	**25.0**	**10.0**	**10.0**	**115.0**	**2.8**
	(MM25BS62QUH)	3.228 3.226	0.9842 0.9841	0.17	0.39	0.43	1.97	1.57	3.16 3.1	2.34	2.4606 2.4601	0.79	3.35	1.65	0.04	1.6535 1.6530	1.65	0.98	0.39	0.39	4.53	6.16
30	**BSPB30Q42**	**82.00 81.95**	**30.000 29.996**	**4.3**	**9.8**	**11.0**	**50.0**	**40.0**	**80.26 78.74**	**59.5**	**62.500 62.487**	**20**	**85**	**42.0**	**1.0**	**42.000 41.987**	**42.0**	**25.0**	**10.0**	**10.0**	**115.0**	**2.7**
	(MM30BS62QUH)	3.228 3.226	1.1811 1.1809	0.17	0.39	0.43	1.97	1.57	3.16 3.1	2.34	2.4606 2.4601	0.79	3.35	1.65	0.04	1.6535 1.6530	1.65	0.98	0.39	0.39	4.53	5.94
35	**BSPB35Q50**	**82.00 81.95**	**35.000 34.995**	**4.3**	**13.0**	**13.0**	**60.0**	**46.0**	**80.26 78.74**	**66.5**	**68.000 67.987**	**20.5**	**95**	**50**	**1.0**	**50.000 49.987**	**42.0**	**25.0**	**10.0**	**10.0**	**126.0**	**3.8**
	(MM35BS72QUH)	3.228 3.226	1.3780 1.3778	0.17	0.51	0.51	2.36	1.81	3.16 3.1	2.62	2.6772 2.6767	0.81	3.74	1.97	0.04	1.9685 1.9680	1.65	0.98	0.39	0.39	4.96	8.36
40	**BSPB40Q50**	**82.00 81.95**	**40.000 39.995**	**4.3**	**13.0**	**13.0**	**60.0**	**46.0**	**80.26 78.74**	**66.5**	**68.000 67.987**	**20.5**	**95**	**50.0**	**1.0**	**50.000 49.987**	**42.0**	**25.0**	**10.0**	**10.0**	**126.0**	**3.7**
	(MM40BS72QUH)	4.173 4.171	1.5748 1.5746	0.17	0.51	0.51	2.36	1.81	4.105 4.045	2.62	2.6772 2.6767	0.81	3.74	1.97	0.04	1.9685 1.9680	1.65	0.98	0.39	0.39	4.96	8.14
HEAVY-DUTY SERIES																						
35	**BSPB35Q65**	**106.00 105.95**	**35.000 34.995**	**5.3**	**11.8**	**18.0**	**76.0**	**66.0**	**104.26 102.74**	**90.0**	**95.000 94.987**	**30.0**	**130.0**	**65.0**	**1.0**	**65.000 64.987**	**53.0**	**32.0**	**13.0**	**15.0**	**175.0**	**9.7**
	(MM35BS100QUH)	3.228 3.226	1.3780 1.3778	0.21	0.46	0.71	2.99	2.6	3.16 3.1	3.54	3.7402 3.7396	1.18	5.12	2.56	0.04	2.5590 2.5585	2.09	1.26	0.51	0.59	6.89	21.34
40	**BSPB40Q65**	**106.00 105.95**	**40.000 39.995**	**5.3**	**11.8**	**18.0**	**76.0**	**66.0**	**104.26 102.74**	**90.0**	**95.000 94.987**	**30.0**	**130.0**	**65.0**	**1.0**	**65.000 64.987**	**53.0**	**32.0**	**13.0**	**15.0**	**175.0**	**9.5**
	(MM40BS100QUH)	4.173 4.171	1.5748 1.5746	0.21	0.46	0.71	2.99	2.6	4.105 4.045	3.54	3.7402 3.7396	1.18	5.12	2.56	0.04	2.5590 2.5585	2.09	1.26	0.51	0.59	6.89	20.9
45	**BSPB45Q65**	**106.00 105.95**	**45.000 44.995**	**5.3**	**11.8**	**18.0**	**76.0**	**66.0**	**104.26 102.74**	**90.0**	**95.000 94.987**	**30.0**	**130.0**	**65.0**	**1.0**	**65.000 64.987**	**53.0**	**32.0**	**13.0**	**15.0**	**175.0**	**9.3**
	(MM45BS100QUH)	4.173 4.171	1.7716 1.7714	0.21	0.46	0.71	2.99	2.6	4.105 4.045	3.54	3.7402 3.7396	1.18	5.12	2.56	0.04	2.5590 2.5585	2.09	1.26	0.51	0.59	6.89	20.46
50	**BSPB50Q65**	**106.00 105.95**	**50.000 49.995**	**5.3**	**11.8**	**18.0**	**76.0**	**66.0**	**104.26 102.74**	**90.0**	**95.000 94.987**	**30.0**	**130.0**	**65.0**	**1.0**	**65.000 64.987**	**53.0**	**32.0**	**13.0**	**15.0**	**175.0**	**9.1**
	(MM50BS100QUH)	4.173 4.171	1.9685 1.9683	0.21	0.46	0.71	2.99	2.6	4.105 4.045	3.54	3.7402 3.7396	1.18	5.12	2.56	0.04	2.5590 2.5585	2.09	1.26	0.51	0.59	6.89	20.02

SEALED, DOUBLE-ROW BALL SCREW SUPPORT BEARINGS FLANGED STYLE

MMF SERIES

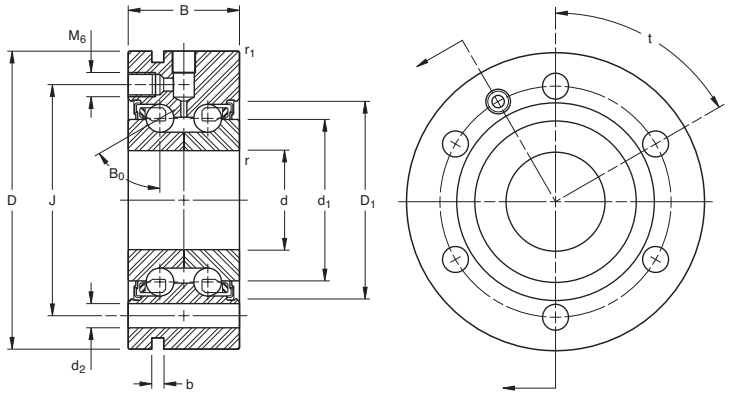

MMF Series Flanged

METRIC AND INCH DIMENSIONAL SIZES

Bearing Number	Bore d/Tol	O.D. D/Tol	Width B/Tol	Wt.	Outer Rs1 r1	Inner Rs r	Min. D1	Max. d1	Housing Shoulder Dia.	Shaft Shoulder Dia.	d2 Hole Dia.	Holes	b	Pitch Circle J	Hole Spacing t	Contact Angle B0	Heavy Series
METRIC	**mm +0/ -(µm)**			**kg**	**mm**	**mm**	**mm**	**mm**	**mm**	**mm**	**mm**	**Qty.**		**mm**	**degrees**		
MMF512BS55PP DM	12 (3.8)	55 (7.6)	25 (254)	0.40	0.6	0.3	33.1	25.0	32.0	19.0	6.5	3	3	42	120	60	
MMF515BS60PP DM	15 (3.8)	60 (7.6)	25 (254)	0.47	0.6	0.3	37.0	27.6	34.5	21.5	6.5	3	3	46	120	60	
MMF517BS62PP DM	17 (3.8)	62 (7.6)	25 (254)	0.49	0.6	0.3	37.8	28.4	36.5	23.5	6.5	3	3	48	120	60	
MMF520BS68PP DM	20 (5.1)	68 (7.6)	28 (254)	0.64	0.6	0.3	43.2	34.5	42.5	27.5	6.5	4	3	53	90	60	
MMF525BS75PP DM	25 (5.1)	75 (7.6)	28 (254)	0.76	0.6	0.3	49.5	40.6	48.0	33.5	6.5	4	3	58	90	60	
MMF530BS80PP DM	30 (5.1)	80 (7.6)	28 (254)	0.84	0.6	0.3	54.3	45.6	53.5	38.5	6.5	6	3	63	60	60	
MMF540BS100PP DM	40 (6.4)	100 (7.6)	34 (254)	1.50	0.6	0.3	68.7	57.5	67.0	49.0	8.5	4	3	80	90	60	
MMF550BS115PP DM	50 (6.4)	115 (7.6)	34 (254)	1.37	0.6	0.3	82.6	71.5	81.0	63.0	8.5	6	3	94	60	60	
MMF550BS140PP DM	50 (6.4)	140 (8.9)	54 (254)	4.89	0.6	0.6	99.6	81.1	98.5	66.0	10.5	12	3	113	30	60	H
MMF560BS145PP DM	60 (7.6)	145 (8.9)	45 (254)	4.28	0.6	0.6	100.0	89.0	98.0	72.0	8.5	8	3	120	45	60	
INCHES	**in. +0/-(x)**			**lbs.**	**in.**	**in.**	**in.**	**in.**	**in.**	**in.**	**in.**	**Qty.**		**in.**	**degrees**		
MMF512BS55PP DM	0.4724 (0.00015)	2.1654 (0.0003)	0.9843 (0.0100)	0.88	0.024	0.012	1.304	0.905	1.260	0.748	0.256	3	.118	1.654	120	60	
MMF515BS60PP DM	0.5906 (0.00015)	2.3622 (0.0003)	0.9843 (0.0100)	1.04	0.024	0.012	1.456	1.088	1.358	0.846	0.256	3	.118	1.811	120	60	
MMF517BS62PP DM	0.6693 (0.00015)	2.4409 (0.0003)	0.9843 (0.0100)	1.08	0.024	0.012	1.490	1.117	1.437	0.925	0.256	3	.118	1.890	120	60	
MMF520BS68PP DM	0.7874 (0.0002)	2.6772 (0.0003)	1.1024 (0.0100)	1.42	0.024	0.012	1.700	1.357	1.673	1.083	0.256	4	.118	2.087	90	60	
MMF525BS75PP DM	0.9843 (0.0002)	2.9528 (0.0003)	1.1024 (0.0100)	1.68	0.024	0.012	1.943	1.599	1.890	1.319	0.256	4	.118	2.283	90	60	
MMF530BS80PP DM	1.1811 (0.0002)	3.1496 (0.0003)	1.1024 (0.0100)	1.86	0.024	0.012	2.138	1.795	2.106	1.516	0.256	6	.118	2.480	60	60	
MMF540BS100PP DM	1.5748 (0.00025)	3.937 (0.0003)	1.3386 (0.0100)	3.41	0.024	0.012	2.704	2.264	2.638	1.929	0.335	4	.118	3.150	90	60	
MMF550BS115PP DM	1.9685 (0.00025)	4.5276 (0.0003)	1.3386 (0.0100)	4.37	0.024	0.012	3.250	2.815	3.189	2.408	0.335	6	.118	3.701	60	60	
MMF550BS140PP DM	1.9685 (0.00025)	5.5118 (0.00035)	2.1260 (0.0100)	10.78	0.024	0.024	3.919	3.192	3.878	2.598	0.413	12	.118	4.449	30	60	H
MMF560BS145PP DM	2.3622 (0.0003)	5.7087 (0.00035)	1.7717 (0.0100)	9.43	0.024	0.024	3.938	3.308	3.858	2.835	0.335	8	.118	4.724	45	60	

SEALED, DOUBLE-ROW BALL SCREW SUPPORT BEARINGS CARTRIDGE STYLE

MMN SERIES

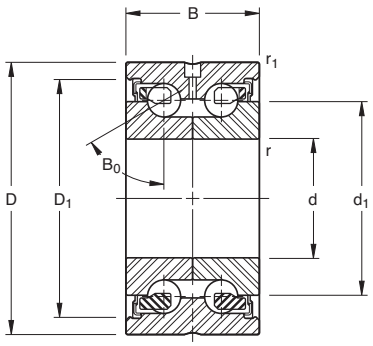

MMN Series

METRIC AND INCH DIMENSIONAL SIZES

Bearing Number	Bore d/Tol	O.D. D/Tol	Width B/Tol	Wt.	Outer R_1	Inner r	Min. d_1	Max. dia.	Housing Shoulder Dia.	Shaft Shoulder Dia.	Contact Dia. B_o	Heavy Series
METRIC	**mm +0/ -(µm)**			**kg**	**mm**	**mm**	**mm**	**mm**	**mm**	**mm**	**degrees**	
MMN512BS42PP DM	12 (3.8)	42 (6.4)	25 (254)	0.20	0.6	0.3	33.1	25.0	32.0	19.0	60	
MMN515BS45PP DM	15 (3.8)	45 (6.4)	25 (254)	0.23	0.6	0.3	37.0	27.6	34.5	21.5	60	
MMN517BS47PP DM	17 (3.8)	47 (6.4)	25 (254)	0.24	0.6	0.3	37.8	28.4	36.5	23.5	60	
MMN520BS52PP DM	20 (5.1)	52 (7.6)	28 (254)	0.32	0.6	0.3	43.2	34.5	42.5	27.5	60	
MMN525BS57PP DM	25 (5.1)	57 (7.6)	28 (254)	0.35	0.6	0.3	49.3	40.6	48.0	33.5	60	
MMN530BS62PP DM	30 (5.1)	62 (7.6)	28 (254)	0.40	0.6	0.3	54.3	45.6	53.5	38.5	60	
MMN540BS75PPDM	40 (6.4)	75 (7.6)	34 (254)	0.64	0.6	0.3	68.7	57.5	67.0	49.0	60	
MMN550BS90PP DM	50 (6.4)	90 (7.6)	34 (254)	0.91	0.6	0.3	82.6	71.5	81.0	63.0	60	
MMN550BS110PP DM	50 (6.4)	110 (8.9)	54 (254)	2.42	0.6	0.6	99.6	81.1	98.5	66.0	60	H
MMN560BS110PP DM	60 (7.6)	110 (8.9)	45 (254)	1.82	0.6	0.6	100.0	84.0	98.0	72.0	60	
INCHES	**in. +0/-(x)**			**lbs.**	**in.**	**in.**	**in.**	**in.**	**in.**	**in.**	**degrees**	
MMN512BS42PP DM	0.4724 (0.00015)	1.6535 (0.00025)	0.9843 (.0100)	0.44	0.024	0.012	1.304	0.985	1.259	0.748	60	
MMN515BS45PP DM	0.5906 (0.00015)	1.7717 (0.00025)	0.9843 (0.0100)	0.50	0.024	0.012	1.456	1.088	1.358	0.846	60	
MMN517BS47PP DM	0.6693 (0.00015)	1.8504 (0.00025)	0.9843 (0.0100)	0.54	0.024	0.012	1.490	1.117	1.437	0.925	60	
MMN520BS52PP DM	0.7874 (0.0002)	2.0472 (0.0003)	1.1024 (0.0100)	0.70	0.024	0.012	1.700	1.357	1.673	1.083	60	
MMN525BS57PP DM	0.9843 (0.0002)	2.2441 (0.0003)	1.1024 (0.0100)	0.78	0.024	0.012	1.943	1.599	1.890	1.319	60	
MMN530BS62PP DM	1.1811 (0.0002)	2.4409 (0.0003)	1.1024 (0.0100)	0.88	0.024	0.012	2.138	1.795	2.106	1.516	60	
MMN540BS75PPDM	1.5748 (0.00025)	2.9528 (0.0003)	1.3386 (0.0100)	1.42	0.024	0.012	2.704	2.264	2.638	1.929	60	
MMN550BS90PP DM	1.9685 (0.00025)	3.5433 (0.0003)	1.3386 (0.0100)	2.02	0.024	0.012	3.250	2.815	3.189	2.408	60	
MMN550BS110PP DM	1.9685 (0.00025)	4.3307 (0.00035)	2.1260 (0.0100)	5.34	0.024	0.024	3.919	3.192	3.878	2.598	60	H
MMN560BS110PP DM	2.3622 (0.0003)	4.3307 (0.00035)	1.7717 (0.0100)	4.02	0.024	0.024	3.938	3.308	3.858	2.835	60	

EX-CELL-O SPINDLE BEARINGS

- "EX" Series (Timken® Fafnir® WI construction) designed to meet Ex-Cell-O replacement requirements for inch nominal spindles with bore and O.D. tolerances nominal to plus.
- "XWO" Series (Timken Fafnir WO separable construction) designed to meet Ex-Cell-O replacement requirements for inch nominal spindles with bore and O.D. tolerances nominal to minus.
- Measurement of shafts and housings (or reconditioning of parts) should determine replacement bearing style.
- Shafts and housings should be checked (and reworked) to avoid improper shaft and housing fits.
- Preload selection should be based on operating speed and lubrication system of spindle.

MM-EX

REPLACEMENT BEARINGS - FOR EX-CELL-O SPINDLES

Bearing Number	Ex-Cell-O Part No.	Preload lbs.	Bore (in.)		O.D. (in.)		Width - Pair (in.)		Maximum Speed (RPM)
			Max.	Min.	Max.	Min.	Max.	Min.	
MM20EXCR DU FS223	20	0	0.3752	.3750	1.1252	1.1250	0.6875	0.6775	65000
MM30EXCR DU FS223	30	0	0.6252	.6250	1.5002	1.5000	1.0000	0.9900	35000
MM30EXCR DU 5 #	30	5	0.6252	.6250	1.5002	1.5000	1.0000	0.9900	25000
MM50EXCR DU FS223	50	0	0.8127	.8125	2.0002	2.0000	1.0000	0.9900	30000
MM50EXCR DU 10 #	50	10	0.8127	.8125	2.0002	2.0000	1.0000	0.9900	18000
MM50EXCR DU 50 #	50	50	0.8127	.8125	2.0002	2.0000	1.0000	0.9900	5000
*MM55EXCR DU 10 #	55	10	0.8127	.8125	2.0002	2.0000	1.0000	0.9900	22000
MM57EXCR DU FS223	57	0	1.0627	1.0625	2.2502	2.2500	1.0000	0.9900	30000
MM57EXCR DU 10 #	57	10	1.0627	1.0625	2.2502	2.2500	1.0000	0.9900	15000
MM57EXCR DU 50 #	57	50	1.0627	1.0625	2.2502	2.2500	1.0000	0.9900	5000
MM67EXCR DU FS223	67	0	1.2502	1.2500	2.4377	2.4375	1.2500	1.2400	30000
MM67EXCR DU 10 #	67	10	1.2502	1.2500	2.4377	2.4375	1.2500	1.2400	12500
MM67EXCR DU 30 #	67	30	1.2502	1.2500	2.4377	2.4375	1.2500	1.2400	7500
MM67EXCR DU 75 #	67	75	1.2502	1.2500	2.4377	2.4375	1.2500	1.2400	4500
MM90EXCR DU 20 #	90	20	1.6252	1.6250	3.4377	3.4375	1.6250	1.6150	10000
MM90EXCR DU 100 #	90	100	1.6252	1.6250	3.4377	3.4375	1.6250	1.6150	4500
MM90EXCR DU 150 #	90	150	1.6252	1.6250	3.4377	3.4375	1.6250	1.6150	2700
MM90EXCR DU 250 #	90	250	1.6252	1.6250	3.4377	3.4375	1.6250	1.6150	900
**MM92EXCR DU 20 #	92	20	1.7502	1.7500	3.4377	3.4375	1.6250	1.6150	12000
**MM92EXCR DU 100 #	92	100	1.7502	1.7500	3.4377	3.4375	1.6250	1.6150	4500
**MM92EXCR DU 150 #	92	150	1.7502	1.7500	3.4377	3.4375	1.6250	1.6150	2700
**MM92EXCR DU 250 #	92	250	1.7502	1.7500	3.4377	3.4375	1.6250	1.6150	900
MM115EXCR DU 30 #	115	30	2.2502	2.2500	4.7502	4.7500	2.2500	2.2400	5000
MM115EXCR DU 250 #	115	250	2.2502	2.2500	4.7502	4.7500	2.2500	2.2400	3600
MM115EXCR DU 350 #	115	350	2.2502	2.2500	4.7502	4.7500	2.2500	2.2400	1800
MM135EXCR DU 20 #	135	20	1.2502	1.2500	2.6877	2.6875	1.2500	1.2400	8000
MM135EXCR DU 75 #	135	75	1.2502	1.2500	2.6877	2.6875	1.2500	1.2400	4000
MM155EXCR DU 150 #	155	150	2.7502	2.7500	4.7502	4.7500	2.2500	2.2400	4000
MM155EXCR DU 300 #	155	300	2.7502	2.7500	4.7502	4.7500	2.2500	2.2400	1800
MM165EXCR DU 200 #	165	200	3.5002	3.5000	6.3127	6.3125	3.0000	2.9900	2800
MM165EXCR DU 400 #	165	400	3.5002	3.5000	6.3127	6.3125	3.0000	2.9900	1200

These bearings not intended for new design applications. Consult your local Timken representative.
Do not interchange with MM-XWO.
* Four slots in outer ring faces.
** No keyway in bore.
FS-223 Zero to negative preload.

TIMKEN MM-EX AND MM-XWO BEARINGS FOR REPLACEMENT ON EX-CELL-O SPINDLES

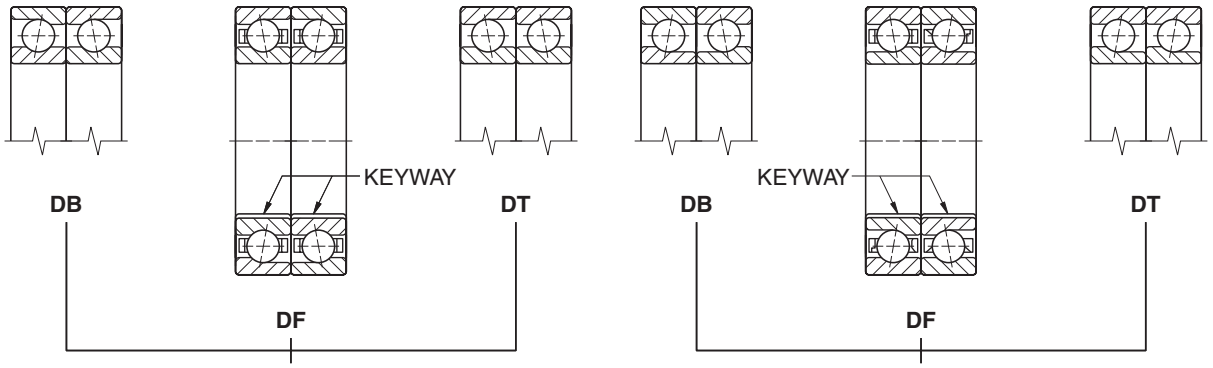

Old design, MM-EX
Bore and O.D. Tolerance
Nominal + Tolerance
"WI" Construction

New Design, MM-XWO
Bore and O.D. Tolerance
Nominal - Tolerance
"WO" Construction

MM-XWO

REPLACEMENT BEARINGS -FOR EX-CELL-O SPINDLES

Bearing Number	Ex-Cell-O Part No.	Preload lbs.	Bore (in.)		O.D. (in.)		Width - Pair (in.)		Maximum (RPM)		
			Max.	Min.	Max.	Min.	Max.	Min.	Grease	Oil	Mist
MM20XWOCRDU E9103A	XLO 20-107	0	0.37500	0.37485	1.1250	1.1248	0.6875	0.6675	40000	65000	80000
MM30XWOCRDU E9103C	XLO 30-57	10	0.62500	0.62485	1.5000	1.4998	1.0000	0.9800	27000	30000	35000
MM30XWOCRDU E9103A	XLO 30-107	0	0.62500	0.62485	1.5000	1.4998	1.0000	0.9800	35000	40000	60000
MM55XWOCRDU E9103E	XLO 55-27	50	0.81250	0.81235	2.0000	1.9998	1.0000	0.9800	5000	8000	12000
MM55XWOCRDU E9103C	XLO 55-57	20	0.81250	0.81235	2.0000	1.9998	1.0000	0.9800	20000	22000	24000
MM55XWOCRDU E9103A	XLO 55-107	0	0.81250	0.81235	2.0000	1.9998	1.0000	0.9800	24000	27000	45000
MM57XWOCRDU E9103F	XLO 57-17	100	1.06250	1.06235	2.2500	2.2498	1.0000	0.9800	2000	4000	6000
MM57XWOCRDU E9103C	XLO 57-57	20	1.06250	1.06235	2.2500	2.2498	1.0000	0.9800	18000	20000	22000
MM57XWOCRDU E9103A	XLO 57-107	0	1.06250	1.06235	2.2500	2.2498	1.0000	0.9800	22000	25000	35000
MM67XWOCRDU E9103F	XLO 67-17	90	1.25000	1.24980	2.4375	2.4373	1.2500	1.2300	36000	4500	6000
MM67XWOCRDU E9103C	XLO 67-57	20	1.25000	1.24980	2.4375	2.4373	1.2500	1.2300	12500	15000	20000
MM67XWOCRDU E9103A	XLO 67-107	0	1.25000	1.24980	2.4375	2.4373	1.2500	1.2300	16000	20000	30000
MM90XWOCRDU E9103F	XLO 90-17	250	1.62500	1.62480	3.4375	3.4372	1.6250	1.6050	1000	2000	4000
MM90XWOCRDU E9103D	XLO 90-47	175	1.62500	1.62480	3.4375	3.4372	1.6250	1.6050	3000	5000	8000
MM90XWOCRDU E9103C	XLO 90-57	100	1.62500	1.62480	3.4375	3.4372	1.6250	1.6050	5000	7000	11000
MM90XWOCRDU E9103A	XLO 90-77	20	1.62500	1.62480	3.4375	3.4372	1.6250	1.6050	10000	14000	20000
MM115XWOCRDU E9103E	XLO 115-27	300	2.25000	2.24980	4.7500	4.7496	2.2500	2.2300	1000	2000	3000
MM115XWOCRDU E9103C	XLO 115-47	150	2.25000	2.24980	4.7500	4.7496	2.2500	2.2300	3000	4500	7000
MM115XWOCRDU E9103A	XLO 115-77	30	2.25000	2.24980	4.7500	4.7496	2.2500	2.2300	6000	8000	15000
MM135XWOCRDU E9103C	XLO 135-67	50	1.25000	1.24980	2.6875	2.6873	1.2500	1.2300	6000	7000	12000
MM135XWOCRDU E9103A	XLO 135-10	70	1.25000	1.24980	2.6875	2.6873	1.2500	1.2300	15000	19000	28000
MM155XWOCRDU E9103D	XLO 155-37	300	2.75000	2.74980	4.7500	4.7496	2.2500	2.2300	1000	2000	3000
MM155XWOCRDU E9103B	XLO 155-67	150	2.75000	2.74980	4.7500	4.7496	2.2500	2.2300	4000	5000	6500
MM155XWOCRDU E9103A	XLO 155-87	50	2.75000	2.74980	4.7500	4.7496	2.2500	2.2300	6000	7000	10000
MM165XWOCRDU E9103E	XLO 165-27	800	3.50000	3.49975	6.3125	6.3121	3.0000	2.9800	500	1000	2000
MM165XWOCRDU E9103C	XLO 165-57	250	3.50000	3.49975	6.3125	6.3121	3.0000	2.9800	2000	3000	5000
MM165XWOCRDU E9103A	XLO 165-87	50	3.50000	3.49975	6.3125	6.3121	3.0000	2.9800	5000	6500	9000

Do not interchange with MM-EX.
MM-XWO produced to nominal minus tolerance.

Timken® is a registered trademark of The Timken Company. | © 2014 The Timken Company | Printed in U.S.A.

TIMKEN

The Timken team applies their know-how to improve the reliability and performance of machinery in diverse markets worldwide. The company designs, makes and markets high-performance mechanical components, including bearings, gears, chain and related mechanical power transmission products and services.

Stronger. **Commitment.** Stronger. **Value.** Stronger. **Worldwide.** Stronger. **Together.** **Stronger.**

www.timken.com